Manufacturers:
Greenheck Fan Corporation, PO Box 410, 400 Ross Ave, Schofield, WI 54476
The Airolite Company, LLC, PO Box 410, 400 Ross Ave, Schofield, WI 54476

Product Lines:
Greenheck Louver Models EHH-601D and ESD-635D (both w/ and w/o VCD-40 Damper), and equivalent nameplate Airolite Louver Models SCH601MD and K6746MD (both w/ and w/o VCD-40 Damper), respectfully.

Compliance Method: The above products have been evaluated for compliance with the requirements of the Florida Department of Community Affairs for Statewide Acceptance per Rule 61G20-3 of the FL Administrative Code and comply with the 8th Edition (2023) Florida Building Code.

Product Description: Aluminum louvers with fixed blades and butt-type frame corner construction with 6063-T5 blade/frame material. The EHH-601D & SCH601MD jambs use 6005-T5 alloy. Optional damper has butt-type frame construction with 6063-T5 blade/frame material. Optional sleeve frame setup uses a sleeve of 5052-H32 material.

Performance Summary (for entire product line): Tested design pressure was +/- 150 PSF. Allowable Stress Design (ASD) design pressures of 90, 105, 130, and 150 PSF correlate to maximum section widths of 72", 61.5", 49.5", and 43" respectfully. Products passed AMCA Standard 540-08 at Enhanced Missile impact Level E (80 fps impact speed), except ESD-635D and K6746MD (both w/ and w/o VCD-40 Damper) when thinner 0.08" thick blade is chosen which passed AMCA Standard 540-08 at Basic Missile impact Level D (50 fps impact speed). All Products passed TAS 201-94, TAS 202-94, and TAS 203-94. All products with VCD-40 passed AMCA 550-15 (Rev 9-18) or AMCA 550-22 with the damper in the closed position. Products can be used inside and outside of the HVHZ and are impact resistant.

Performance Standards:
1. AMCA Standard 540-08, Test Method for Louvers Impacted by Wind Borne Debris.
2. AMCA Standard 550-15 (Rev 9-18) or 550-22, Test Method for High Velocity Wind Driven Rain Resistant Louvers.
3. FBC TAS 201-94, Impact Test Procedures.
4. FBC TAS 202-94, Criteria for Testing Impact & Non-Impact Resistant Building Envelope Components Using Uniform Static Air Pressure.
5. FBC TAS 203-94, Criteria for Testing Products Subject to Cyclic Wind Pressure Loading.

Supporting Technical Documents:
1. Approval Documents:
    a. NOA 24-0904.01 for EHH-601D (w/ and w/o VCD-40 Damper), approved on 10/10/2024
    b. NOA 24-0904.02 for SCH601MD (w/ and w/o VCD-40 Damper), approved on 10/10/2024
    c. NOA 24-0930.04 for ESD-635D (w/ and w/o VCD-40 Damper), approved on 11/14/2024
    d. NOA 24-0930.05 for K6746MD (w/ and w/o VCD-40 Damper), approved on 11/14/2024
2. Listing Documents:
    a. EHH-601D
        i. Listing Appendix # 413, dated 11/14/2024
            1. AMCA 540, Enhanced Impact, Missile Level E, 80 fps
        ii. With VCD-40 damper, Listing Appendix # 414, dated 11/14/2024
            1. AMCA 540, Enhanced Impact, Missile Level E, 80 fps
            2. AMCA 550, with fully closed VCD-40 damper

b. SCH601MD
    i. Listing Appendix # 141, dated 11/14/2024
        1. AMCA 540, Enhanced Impact, Missile Level E, 80 fps
    ii. With VCD-40 damper, Listing Appendix # 142, dated 11/14/2024
        1. AMCA 540, Enhanced Impact, Missile Level E, 80 fps
        2. AMCA 550, with fully closed VCD-40 damper
c. ESD-635D
    i. With 0.08” blade, Listing Appendix # 421, dated 03/05/2020
        1. AMCA 540, Basic Impact, Missile Level D, 50 fps
    ii. With 0.08” blade & VCD-40 damper, Appendix # 463, dated 05/13/2020
        1. AMCA 540, Basic Impact, Missile Level D, 50 fps
        2. AMCA 550, with fully closed VCD-40 damper
    iii. With 0.125” blade, Listing Appendix # 420, dated 03/05/2020
        1. AMCA 540, Enhanced Impact, Missile Level E, 80 fps
    iv. With 0.125” blade & VCD-40 damper, Appendix # 464, dated 05/21/2020
        1. AMCA 540, Enhanced Impact, Missile Level E, 80 fps
        2. AMCA 550, with fully closed VCD-40 damper
d. K6746MD
    i. With 0.08” blade, Listing Appendix # 129, dated 04/10/2019
        1. AMCA 540, Basic Impact, Missile Level D, 50 fps
    ii. With 0.08” blade & VCD-40 damper, Appendix # 160, dated 06/02/2020
        1. AMCA 540, Basic Impact, Missile Level D, 50 fps
        2. AMCA 550, with fully closed VCD-40 damper
    iii. With 0.125” blade, Listing Appendix # 128, dated 04/10/2019
        1. AMCA 540, Enhanced Impact, Missile Level E, 80 fps
        2. AMCA 550, with fully closed VCD-40 damper
    iv. With 0.125” blade & VCD-40 damper, Appendix # 161, dated 06/02/2020
        1. AMCA 540, Enhanced Impact, Missile Level E, 80 fps
        2. AMCA 550, with fully closed VCD-40 damper

3. Test Reports:
    a. 74301.01-602-18, EHH-601D and SCH601MD, signed and sealed on 09/6/2007 by Joseph A. Reed, P.E., Architectural Testing Inc., Schofield, WI
        i. FBC TAS 201-94, FBC TAS 202-94, and FBC TAS 203-94
    b. 74297.01-602-18, ESD-635D and K6746MD, signed and sealed on 09/28/2007 by Joseph A. Reed, P.E., Architectural Testing Inc., Schofield, WI
    c. FBC TAS 201-94, FBC TAS 202-94, and FBC TAS 203-94
    d. B7037.01-602-44, EHH-601D, ESD-635D, SCH601MD, and K6746MD, signed and sealed on 05/18/2012 by Shawn G. Collins, P.E., Architectural Testing Inc., Schofield, WI
        i. AMCA Standard 540-08
    e. QCT22-6667.01, EHH-601D and SCH601MD, signed and sealed on 06/22/2022 by Arlen Fisher, P.E., Quast Consulting & Testing Inc., Mosinee, WI
        i. FBC TAS-201-94, and FBC TAS-203-94
    f. QCT22-6667.02, ESD-635D and K6746MD, signed and sealed on 06/22/2022 by Arlen Fisher, P.E., Quast Consulting & Testing Inc., Mosinee, WI
        i. FBC TAS-201-94, and FBC TAS-203-94
    g. QCT23-7159.01, EHH-601D and SCH601MD, signed and sealed on 01/28/2023 by Brian Sasman, P.E., Quast Consulting & Testing Inc., Mosinee, WI
        i. AMCA 550-22
    h. QCT20-5720.02, ESD-635D and K6746MD, signed and sealed on 04/13/2020 by Arlen Fisher, P.E., Quast Consulting & Testing Inc., Mosinee, WI
        i. AMCA 550-15 (Rev 9-18)

Limits and Conditions Use:

1. Limits/Conditions are as per in above approval and listing documents.
2. All products have a Maximum Design Pressure of +/- 150 PSF Allowable Stress Design (ASD).
3. All products have a Maximum Panel Size of 72” wide x 144” high w/o the VCD-40 damper and 36” wide by 144” high with the VCD-40 damper.
4. Allowable Stress Design (ASD) pressures of 90, 105, 130, and 150 PSF correlate to maximum section widths of 72”, 61.5”, 49.5”, and 43” respectfully.
5. All products are rated to be used inside and outside of the HVHZ.
6. All products are impact resistant for Basic Impact Missile Level D (50 fps). All but 0.08” thick blade setups of ESD-635D and K6746MD products are resistant for Enhanced Impact Missile Level E (80 fps).
7. All products have 6063-T5 blade/frame alloy, except the EHH-601D and SCH601MD jambs which use 6005-T5 alloy. Sleeve of optional sleeve frame setup uses 5052-H32 alloy.
8. All products, with the VCD-40 Damper in the closed position, may be installed in a location where the room behind the louver is <u>not</u> designed to drain water penetrating into the room and the room will house <u>non-</u>water resistant/proof equipment, components, and/or supplies.
9. Both the sleeved mount setup and the non-sleeved (a.k.a. continuous angle, a.k.a. channel frame) mount setup are approved for installation into cracked concrete per ACI-318.

Installation:
Products must be installed in accordance with the above approval documents (attached).

Certification of Independence:
Rice Engineering Inc. and Wayne K Helmila, P.E. do not have and will not acquire a financial interest in any company manufacturing or distributing the products for which this report is being issued. Rice Engineering Inc. and Wayne K Helmila, P.E., do not have and will not acquire a financial interest in any other entity involved in the approval process of the above-listed products.

Statement of Standard Equivalency:
EHH-601D, ESD-635D, SCH601MD, and K6746MD: The requirements of AMCA 540-08 meet or exceed the requirements of ANSI/AMCA 540-13 for the purpose of evaluating the above referenced product testing for Basic as well as Enhanced Missile Impact per the 8th Edition (2023) Florida Building Code.

EHH-601D and SCH601MD: The requirements of AMCA 550-22 meet or exceed the requirements of ANSI/AMCA 550-15 (Rev 9-18) for the purpose of evaluating the above referenced product testing for High Velocity Wind Driven Rain Resistant Louvers per the 8th Edition (2023) Florida Building Code.

Evaluation Report By and PE Stamp:

RICE
ENGINEERING
105 School Creek Trail
Luxemburg, WI 54217
Phone: (920) 617-1042
Fax: (920) 617-1100
www.rice-inc.com

Florida Firm No: F-01000005061
Certificate of Authorization: #9090
Wayne K. Helmila
Registration No: 59092

12/04/2024
COA: 9090

Wayne K Helmila

Digitally signed by Wayne K Helmila
DN: CN=Wayne K Helmila, dnQualifier=A01410D000018CDB8F4AFB001A652B, O=Wisconsin, C=US
Date: 2024.12.04 13:59:07-06'00'

MIAMI-DADE COUNTY
PRODUCT CONTROL SECTION
11805 SW 26 Street, Room 208
Miami, Florida 33175-2474
T (786) 315-2590 F (786) 315-2599
www.miamidade.gov/economy

DEPARTMENT OF REGULATORY AND ECONOMIC RESOURCES (RER)
BOARD AND CODE ADMINISTRATION DIVISION

NOTICE OF ACCEPTANCE (NOA)

Greenheck Fan Corporation
P.O. Box 410
Schofield, WI 54476

SCOPE:

This NOA is being issued under the applicable rules and regulations governing the use of construction materials. The documentation submitted has been reviewed and accepted by Miami-Dade County RER-Product Control Section to be used in Miami Dade County and other areas where allowed by the Authority Having Jurisdiction (AHJ).

This NOA shall not be valid after the expiration date stated below. The Miami-Dade County Product Control Section (In Miami Dade County) and/or the AHJ (in areas other than Miami Dade County) reserve the right to have this product or material tested for quality assurance purposes. If this product or material fails to perform in the accepted manner, the manufacturer will incur the expense of such testing and the AHJ may immediately revoke, modify, or suspend the use of such product or material within their jurisdiction. RER reserves the right to revoke this acceptance if it is determined by Miami-Dade County Product Control Section that this product or material fails to meet the requirements of the applicable building code.

This product is approved as described herein and has been designed to comply with the Florida Building Code, including the High Velocity Hurricane Zone.

DESCRIPTION: Model ESD-635D Aluminum Louver with and without VCD-40 Damper

APPROVAL DOCUMENT: Drawing No. **ESD-635D**, titled "ESD-635D Louver", sheets 1 through 37 of 37, dated 08/09/2017, prepared by Greenheck Fan Corporation, signed and sealed by Wayne K. Helmila, P.E. on 08/19/2024 and 09/27/2024, bearing the Miami-Dade County Product Control revision stamp with the Notice of Acceptance number and expiration date by the Miami-Dade County Product Control Section.

MISSILE IMPACT RATING: Large and Small Missile Impact Resistant

LABELING: Each unit shall bear a permanent label with the manufacturer's name or logo, Schofield, WI or Shelby, NC, model/series, and following statement: "Miami-Dade County Product Control Approved", unless otherwise noted herein.

RENEWAL of this NOA shall be considered after a renewal application has been filed and there has been no change in the applicable building code negatively affecting the performance of this product.

TERMINATION of this NOA will occur after the expiration date or if there has been a revision or change in the materials, use, and/or manufacture of the product or process. Misuse of this NOA as an endorsement of any product, for sales, advertising or any other purposes shall automatically terminate this NOA. Failure to comply with any section of this NOA shall be cause for termination and removal of NOA.

ADVERTISEMENT: The NOA number preceded by the words Miami-Dade County, Florida, and followed by the expiration date may be displayed in advertising literature. If any portion of the NOA is displayed, then it shall be done in its entirety.

INSPECTION: A copy of this entire NOA shall be provided to the user by the manufacturer or its distributors and shall be available for inspection at the job site at the request of the Building Official.

This NOA **renews and revises NOA # 23-1013.08** and consists of this page 1 and evidence pages E-1, E2 and E-3, as well as approval document mentioned above.

The submitted documentation was reviewed by **Carlos M. Utrera, P.E.**

11/14/24

NOA No. 24-0930.04
Expiration Date: December 6, 2029
Approval Date: November 14, 2024

Greenheck Fan Corporation

NOTICE OF ACCEPTANCE: EVIDENCE SUBMITTED

1. EVIDENCE SUBMITTED UNDER PREVIOUS NOAs

A. DRAWINGS *"Submitted under NOA # 10-0921.09"*

1. Drawing No. **ESD-635D**, titled "ESD-635D Louver", sheets 1 through 22 of 22, dated 08/25/2010, prepared by Greenheck Fan Corporation, signed and sealed by L. David Rice, P.E.

B. TESTS

"Submitted under NOA # 07-1015.06"

1. Test reports on 1) Uniform Static Air Pressure Test, Loading per FBC TAS 202-94
2) Large Missile Impact Test per FBC, TAS 201-94
3) Cyclic Wind Pressure Loading per FBC, TAS 203-94
along with marked-up drawings and installation diagram of Series/Model ESD-635D, fixed aluminum louvers, prepared by Architectural Testing, Inc., Test Report No. **74297.01-602-18**, dated 09/25/2007, signed and sealed by Joseph A. Reed, P.E.

2. Test report on Standard Test Methods for Tensile Testing of Metallic Materials, per ASTM E8-03, prepared by Architectural Testing, Inc., Test Report No.**74297.02-602-18**, dated 10/01/2007, signed and sealed by Joseph A. Reed, P.E.

C. CALCULATIONS *"Submitted under NOA # 10-0921.09"*

1. Structural calculations, prepared by Rice Engineering, dated 09/03/2010, signed and sealed by L. David Rice, P.E.

D. QUALITY ASSURANCE

1. Miami-Dade Department of Regulatory and Economic Resources (RER)

E. MATERIAL CERTIFICATIONS

1. None.

F. STATEMENTS *"Submitted under NOA # 16-0201.02"*

1. Statement letter of code conformance to the 5th edition (2014) FBC issued by Rice Engineering, dated 01/11/2016, signed and sealed by L. David Rice, P.E.

"Submitted under NOA # 12-0830.07"

2. Statement letter of code conformance to 2010 FBC issued by Rice Engineering, dated 11/06/2012, signed and sealed by L. David Rice, P.E.

"Submitted under NOA # 10-0921.09"

3. Statement letters of conformance and no financial interest issued by Rice Engineering, dated 09/03/2010, signed and sealed by L. David Rice, P.E.

Carlos M. Utrera, P.E.
Product Control Examiner
NOA No. 24-0930.04
Expiration Date: December 6, 2029
Approval Date: November 14, 2024

NOTICE OF ACCEPTANCE: EVIDENCE SUBMITTED

2. EVIDENCE SUBMITTED UNDER NOA # 17-0919.04, # 22-0816.09 AND NEW

A. DRAWINGS

1. Drawing No. **ESD-635D**, titled "ESD-635D Louver", sheets 1 through 22 of 22, dated 08/09/2017, prepared by Greenheck Fan Corporation, signed and sealed by Wayne K. Helmila, P.E.

B. TESTS

1. None.

C. CALCULATIONS

1. None.

D. QUALITY ASSURANCE

1. Miami-Dade Department of Regulatory and Economic Resources (RER).

E. MATERIAL CERTIFICATIONS

1. None.

F. STATEMENTS

1. Statement letter of code conformance to the 7th Edition (2020) of the FBC, issued by Rice Engineering, dated 10/14/2021, signed and sealed by Wayne K. Helmila, P.E.

2. Testing contract email issued by Eric Jehn from Quast Consulting and Testing, Inc., and dated 08/11/2022.

3. Statement letter of code conformance to the 6th Edition (2017) FBC issued by Rice Engineering, dated 08/30/2017, signed and sealed by Wayne K. Helmila, P.E.

4. Statement letters of no financial interest issued by Rice Engineering, dated 08/30/2017, signed and sealed by Wayne K. Helmila, P.E.

Carlos M. Utrera, P.E.
Product Control Examiner
NOA No. 24-0930.04
Expiration Date: December 6, 2029
Approval Date: November 14, 2024

NOTICE OF ACCEPTANCE: EVIDENCE SUBMITTED

3. NEW EVIDENCE SUBMITTED

A. DRAWINGS

1. Drawing No. **ESD-635D**, titled "ESD-635D Louver", sheets 1 through 37 of 37, dated 08/09/2017, prepared by Greenheck Fan Corporation, signed and sealed by Wayne K. Helmila, P.E. on 08/19/2024 and 09/27/2024.

B. TESTS

1. Test reports on 1) Large Missile Impact Test per FBC, TAS 201-94
2) Cyclic Wind Pressure Loading per FBC, TAS 203-94
along with marked-up drawings and installation diagram of Model ESD-635D, aluminum louver, prepared by Quast Consulting & Testing, Inc., Test Report No. **QCT22-6667.02**, dated 06/16/2022, signed and sealed by Arlen Fisher, P.E.

2. Test report on Wind Driven Rain Resistance Test, per ANSI/AMCA 550-15, prepared by Quast Consulting & Testing, Inc., Test Report No. **QCT20-5720.02**, dated 04/13/2020, signed and sealed by Arlen Fisher, P.E.

C. CALCULATIONS

1. Greenheck ESD-635D louver calculations, prepared by Rice Engineering, dated 09/27/2024, signed and sealed by Wayne K. Helmila, P.E.

D. QUALITY ASSURANCE

1. Miami-Dade Department of Regulatory and Economic Resources (RER).

E. MATERIAL CERTIFICATIONS

1. None.

F. STATEMENTS

1. Statement letter of code conformance to the 8th edition (2023) of the FBC, issued by Rice Engineering, dated 09/27/2024, signed and sealed by Wayne K. Helmila, P.E.

Carlos M. Utrera, P.E.
Product Control Examiner
NOA No. 24-0930.04
Expiration Date: December 6, 2029
Approval Date: November 14, 2024

FLANGE FRAME SLEEVE MOUNT

HORIZONTAL SECTION CUT

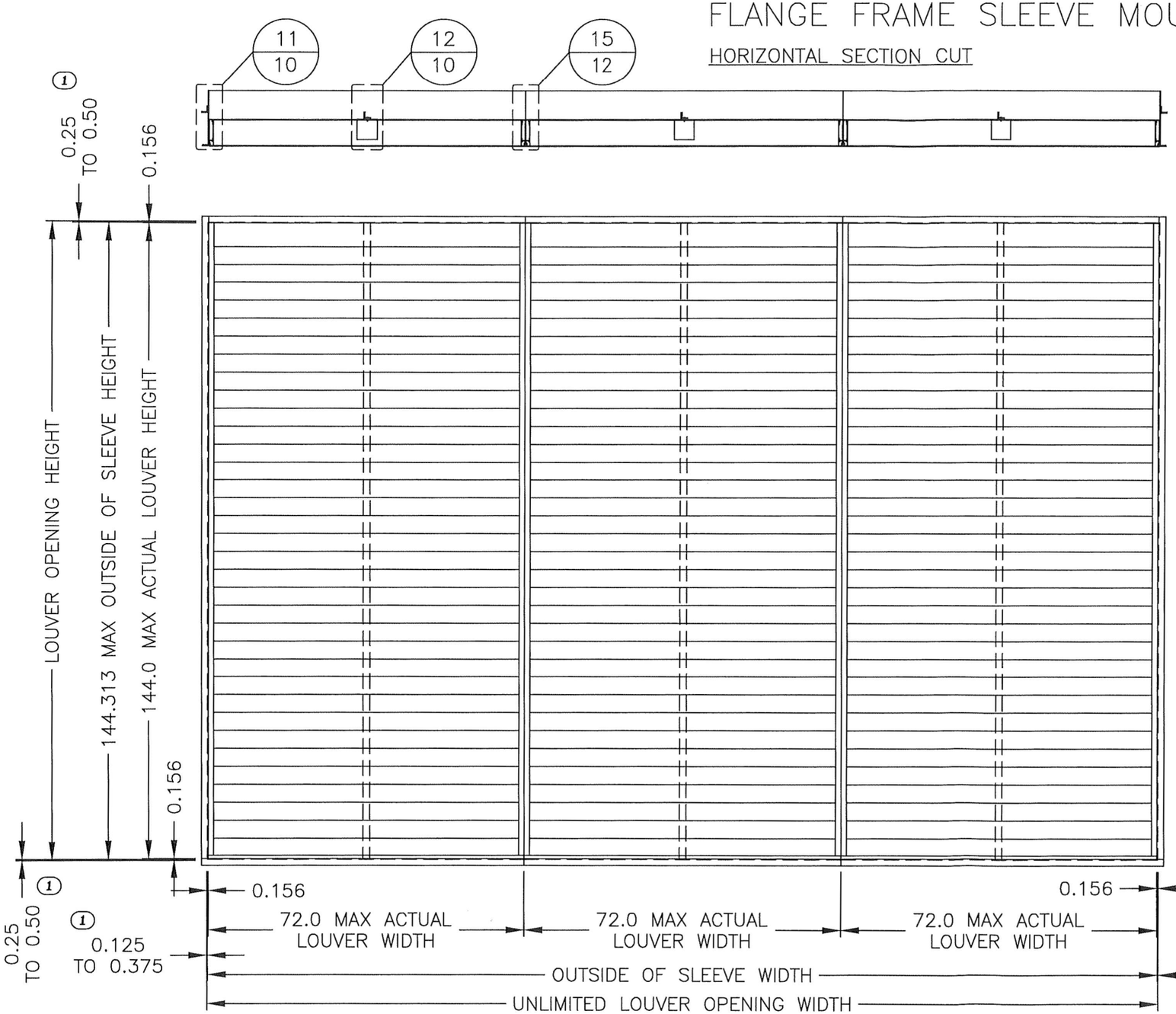

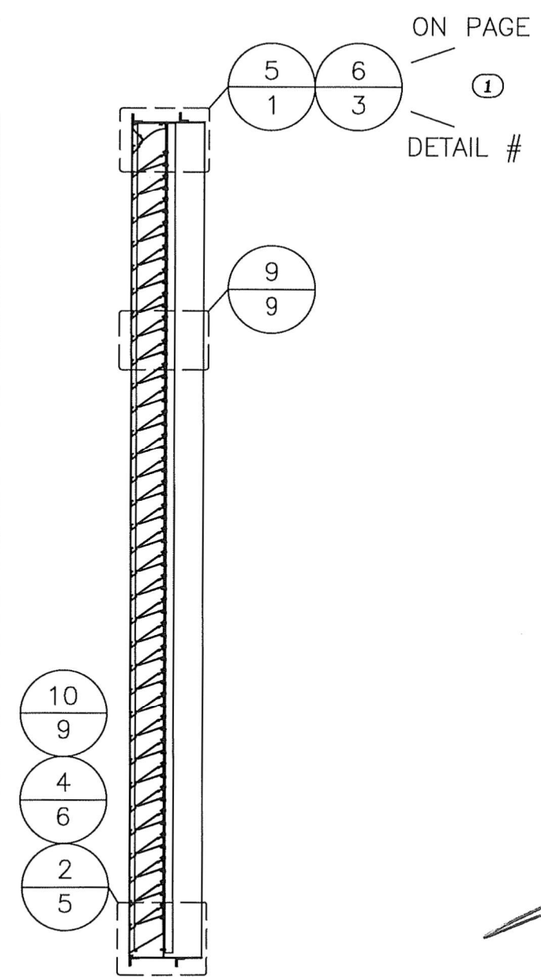

VERTICAL SECTION CUT

DESIGN PRESSURE RATING	MAX SINGLE SECTION SIZE
+/- 150 PSF	43 x 144
+/- 130 PSF	49.5 x 144
+/- 105 PSF	61.5 x 144
+/- 90 PSF	72 x 144

DATE 8/9/2017

DRAWN BY MES

SCALE

SHEET NO. 1 OF 37

CAD DRAWING NO. ESD-635D

GREENHECK
P.O.BOX 410 SCHOFIELD, WISCONSIN 54476-0410

TITLE ESD-635D LOUVER
FLANGE FRAME SLEEVE MOUNT
ELEVATION
H≤144"

WAYNE K. HELMILA
LICENSE
No. 59092
STATE OF FLORIDA
PROFESSIONAL ENGINEER

SEP 27 2024

PRODUCT REVISED
as complying with the Florida Building Code
NOA-No. 24-0930.04
Expiration Date 12/06/2029
By
Miami-Dade Product Control

RICE
ENGINEERING
105 School Creek Trail
Luxemburg, WI 54217
Phone: (920) 617-1042
Fax: (920) 617-1100
www.rice-inc.com
Florida Firm No: F-01000005061
Certificate of Authorization: #9090
Wayne K. Helmila
Registration No: 59092

REV 01: 8/1/24, UPDATED TITLE BLOCK & DETAIL TITLES ON ALL PAGES AS NEEDED, UPDATED DETAIL CALLOUT PAGE NUMBERS AS NEEDED ON ALL PAGES, ADDED PRESSURE BOX, ADDED DETAIL CALLOUT NOTES, & REMOVED "TYP" FROM EDGE GAP X4.

CONTINUOUS ANGLE MOUNT

HORIZONTAL SECTION CUT

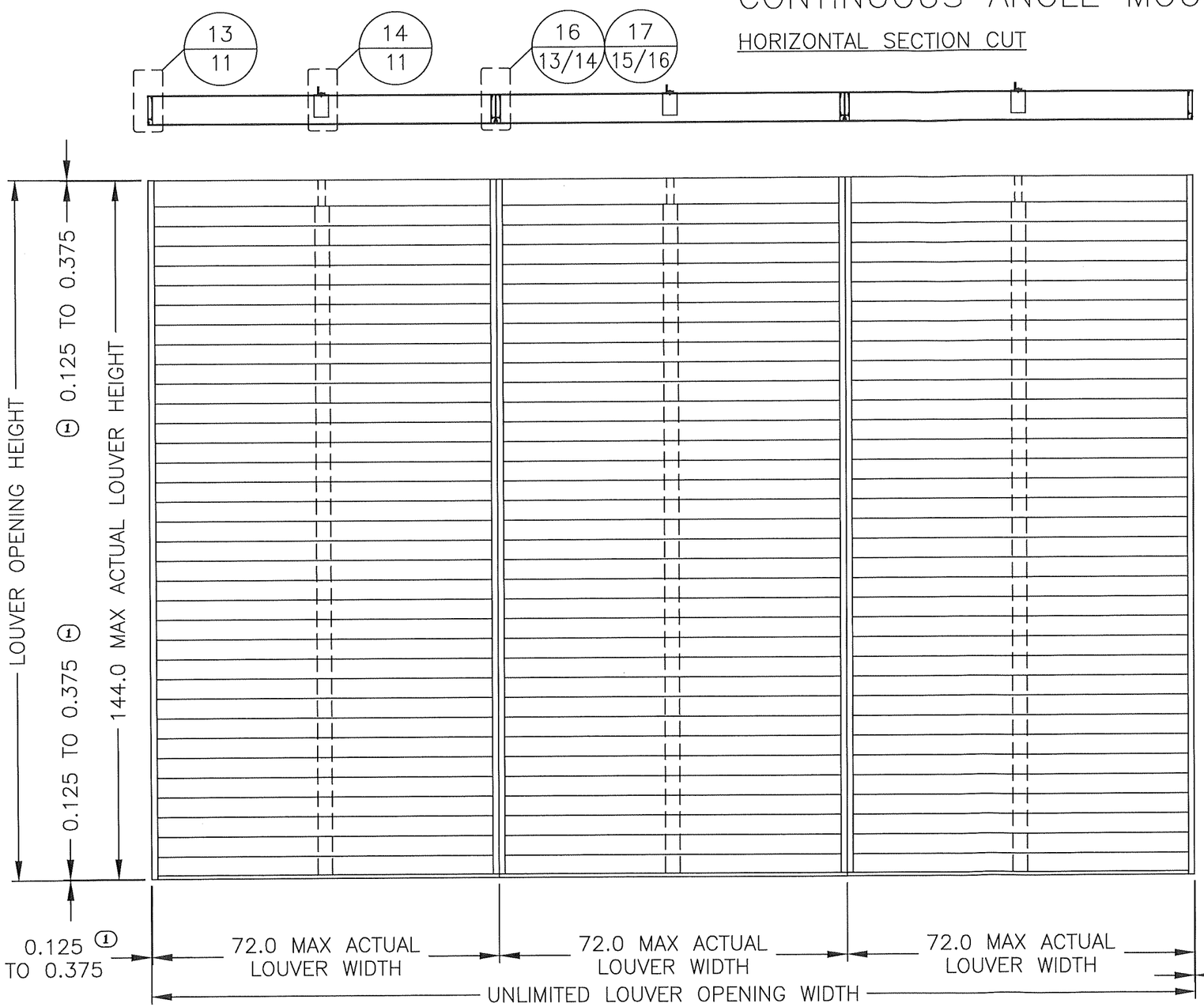

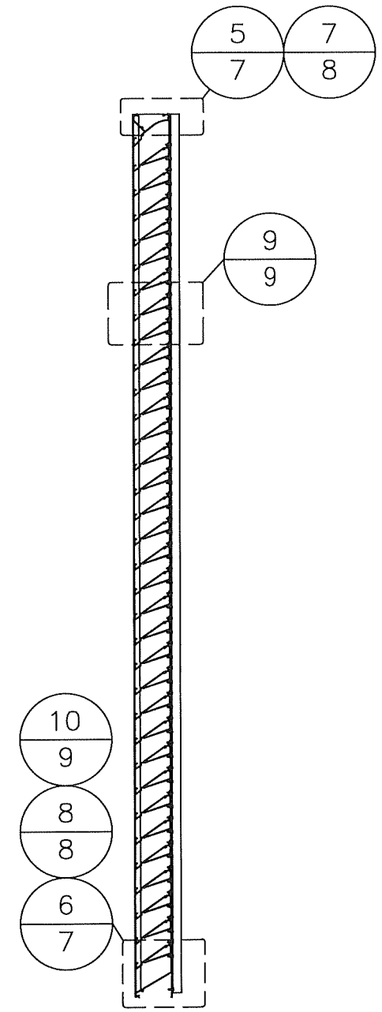

VERTICAL SECTION CUT

0.125 ① TO 0.375

REV 01: 8/1/24, REMOVED "TYP" FROM EDGE GAP X4.

PRODUCT REVISED
as complying with the Florida Building Code
NOA-No. 24-0930.04
Expiration Date 12/06/2029
By
Miami-Dade Product Control

DRAWN BY MES	DATE 8/9/2017
SCALE	
SHEET NO. 2 OF 37	
CAD DRAWING NO. ESD-635D	

GREENHECK
P.O.BOX 410 SCHOFIELD, WISCONSIN 54476-0410

TITLE
ESD-635D LOUVER
CONTINUOUS ANGLE MOUNT
ELEVATION
H≤144"

WAYNE K. HELMILA
LICENSE
No. 59092
STATE OF FLORIDA
PROFESSIONAL ENGINEER

SEP 27 2024

RICE
ENGINEERING
105 School Creek Trail
Luxemburg, WI 54217
Phone: (920) 617-1042
Fax: (920) 617-1100
www.rice-inc.com
Florida Firm No: F-01000005061
Certificate of Authorization: #9090
Wayne K. Helmila
Registration No: 59092

FLANGE FRAME SLEEVE MOUNT W/ VCD-40 DAMPER

HORIZONTAL SECTION CUT

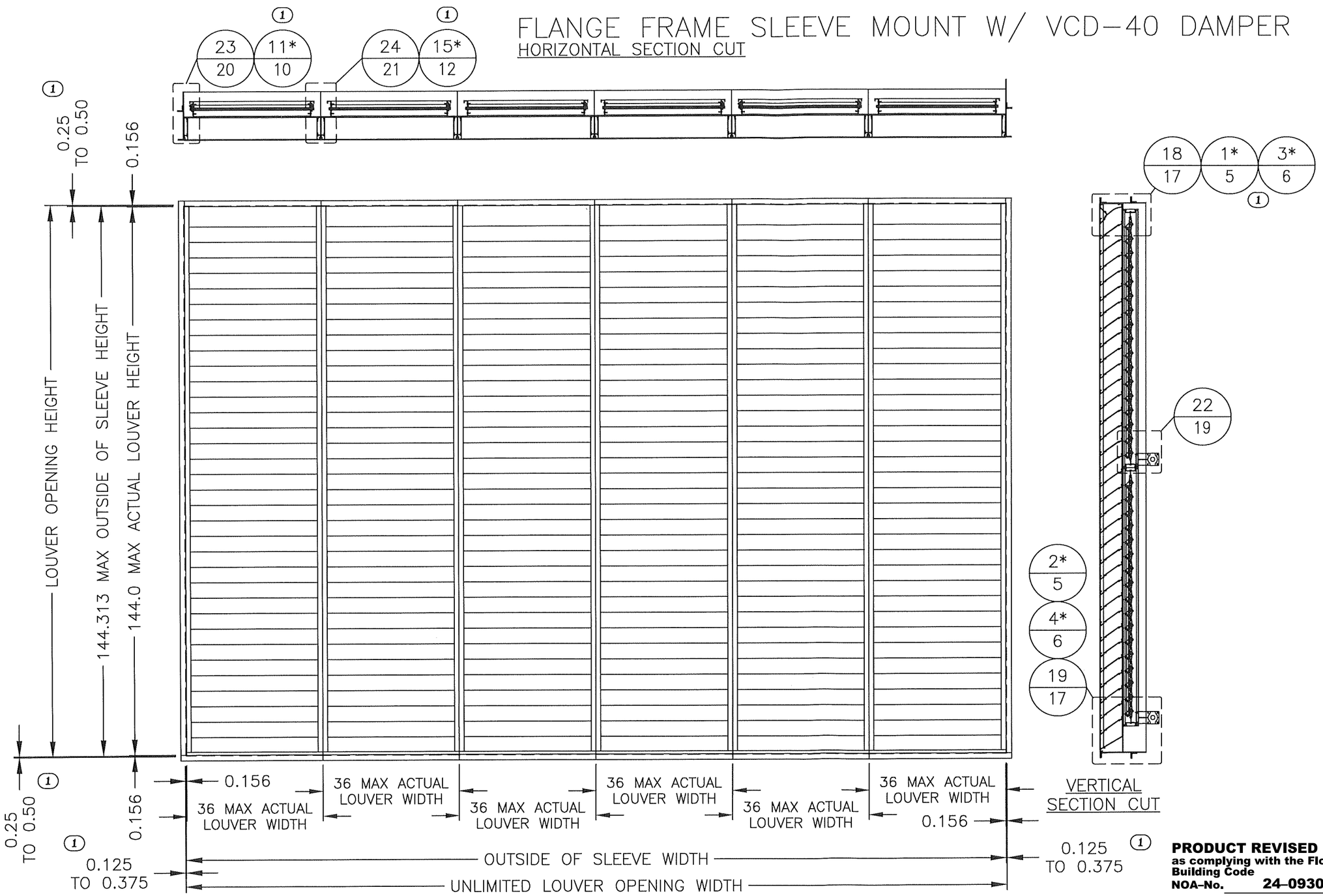

(1) * NON-DAMPER SPECIFIC DETAIL WHICH PROVIDES ADDITIONAL SPECIFICS.

REV 01: 8/1/24, REMOVED "TYP" FROM EDGE GAP X4, ADDED DETAIL CALLOUTS 1/2/3/4/11/15, & ADDED ASTERISK NOTE.

PRODUCT REVISED
as complying with the Florida Building Code
NOA-No. 24-0930.04
Expiration Date 12/06/2029
By
Miami-Dade Product Control

DRAWN BY MES	DATE 8/9/2017
SCALE	SHEET NO. 3 OF 37
CAD DRAWING NO. ESD-635D	

GREENHECK
P.O.BOX 410 SCHOFIELD, WISCONSIN 54476-0410

TITLE ESD-635D LOUVER W/VCD-40 FLANGE FRAME SLEEVE MOUNT ELEVATION H≤144"

WAYNE K. HELMILA LICENSE No. 59092 STATE OF FLORIDA PROFESSIONAL ENGINEER

SEP 27 2024

RICE ENGINEERING
105 School Creek Trail
Luxemburg, WI 54217
Phone: (920) 617-1042
Fax: (920) 617-1100
www.rice-inc.com
Florida Firm No: F-01000005061
Certificate of Authorization: #9090
Wayne K. Helmila
Registration No: 59092

CONTINUOUS ANGLE MOUNT W/ VCD-40 DAMPER

HORIZONTAL SECTION CUT

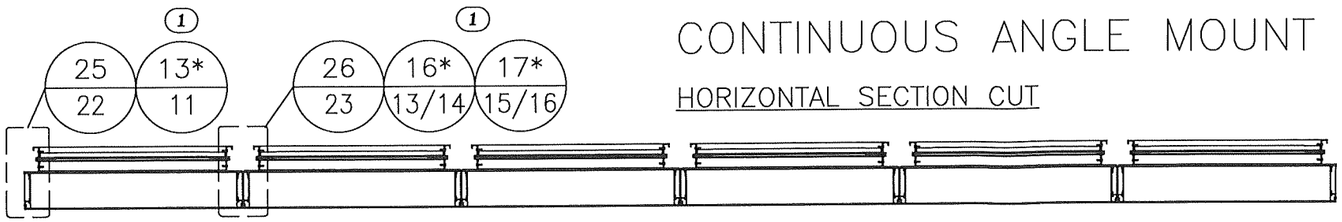

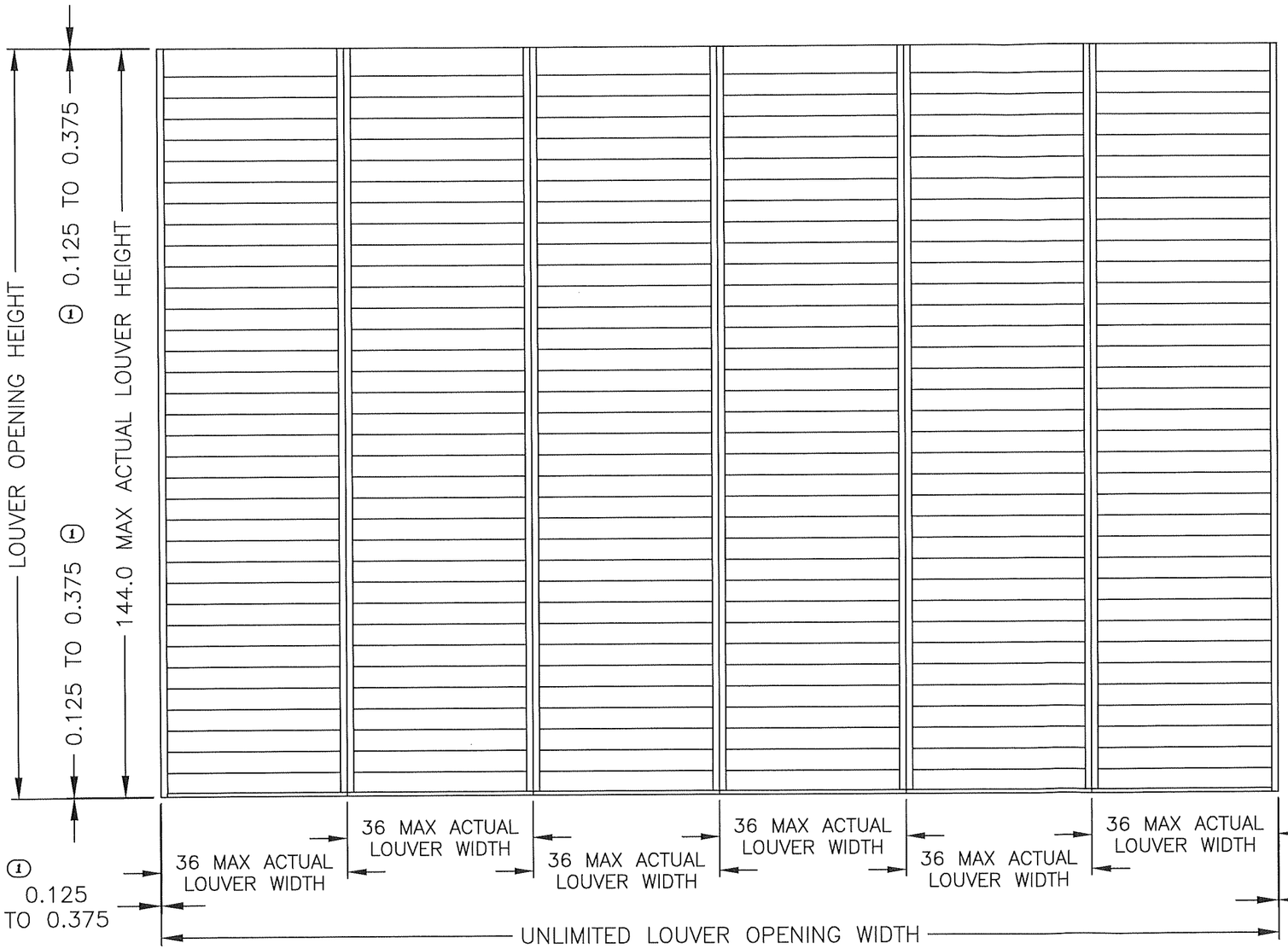

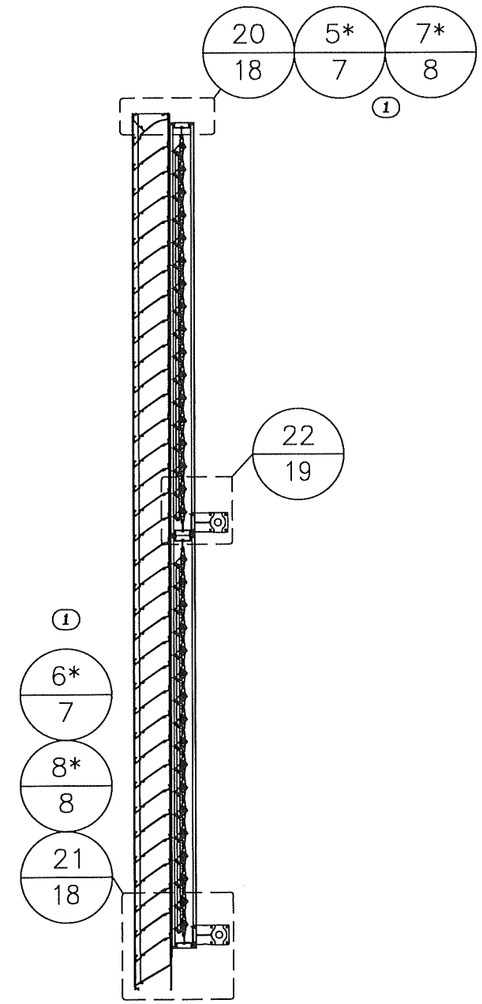

VERTICAL SECTION CUT

① * NON-DAMPER SPECIFIC DETAIL WHICH PROVIDES ADDITIONAL SPECIFICS.

REV 01: 8/1/24, REMOVED "TYP" FROM EDGE GAP X4, & ADDED DETAIL CALLOUTS 5/6/7/8/13/16/17, & ADDED ASTERISK NOTE.

PRODUCT REVISED
as complying with the Florida Building Code
NOA-No. 24-0930.04
Expiration Date 12/06/2029
By
Miami-Dade Product Control

DATE	8/9/2017
DRAWN BY	MES
SCALE	
SHEET NO.	4 OF 37
CAD DRAWING NO.	ESD-635D

GREENHECK
P.O.BOX 410 SCHOFIELD, WISCONSIN 54476-0410

TITLE
ESD-635D LOUVER W/VCD-40
CONTINUOUS ANGLE MOUNT
ELEVATION
H≤144"

WAYNE K. HELMILA
LICENSE
No. 59092
STATE OF FLORIDA
PROFESSIONAL ENGINEER

SEP 27 2024

RICE
ENGINEERING
105 School Creek Trail
Luxemburg, WI 54217
Phone: (920) 617-1042
Fax: (920) 617-1100
www.rice-inc.com
Florida Firm No: F-01000005061
Certificate of Authorization: #9090
Wayne K. Helmila
Registration No: 59092

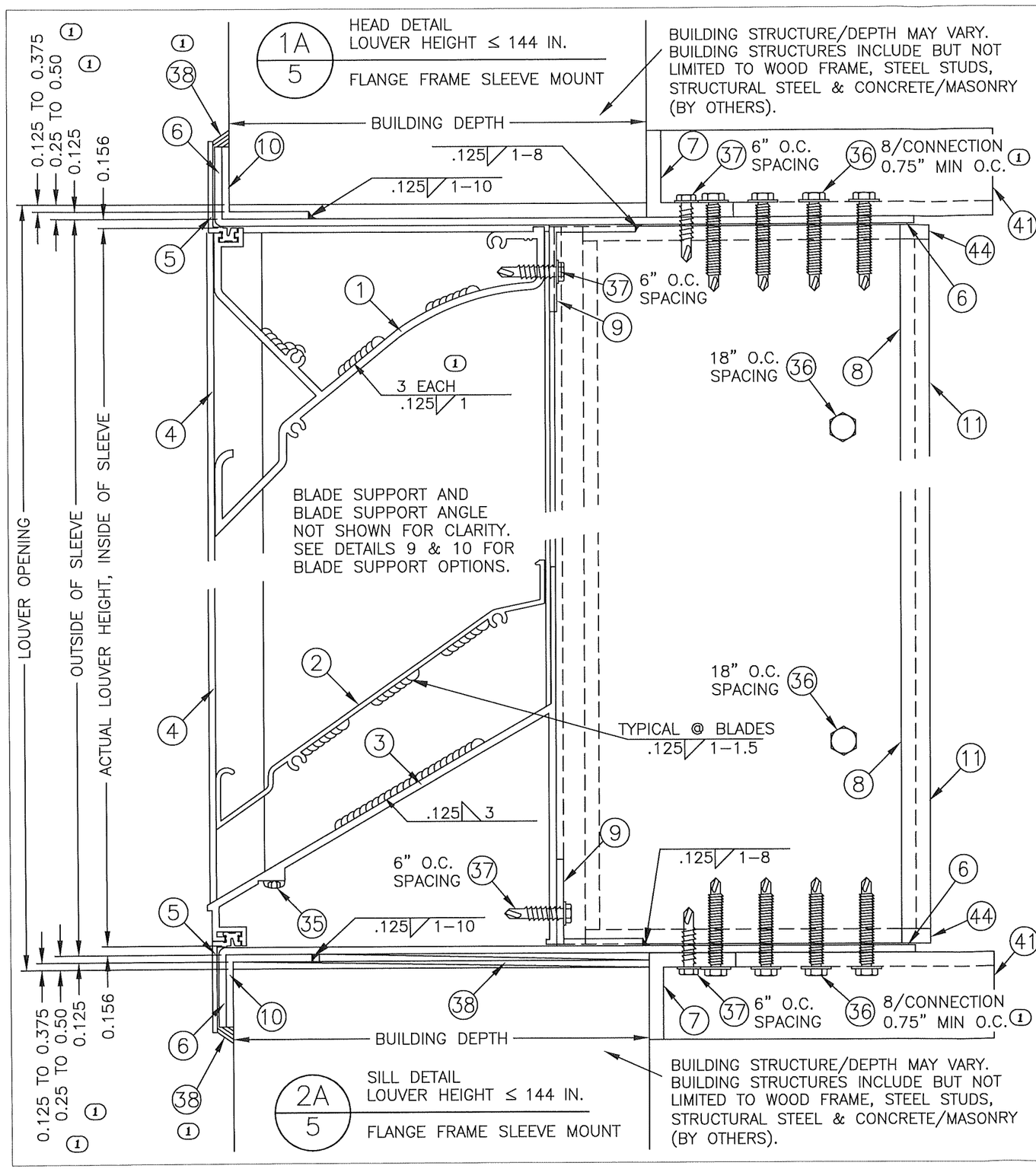

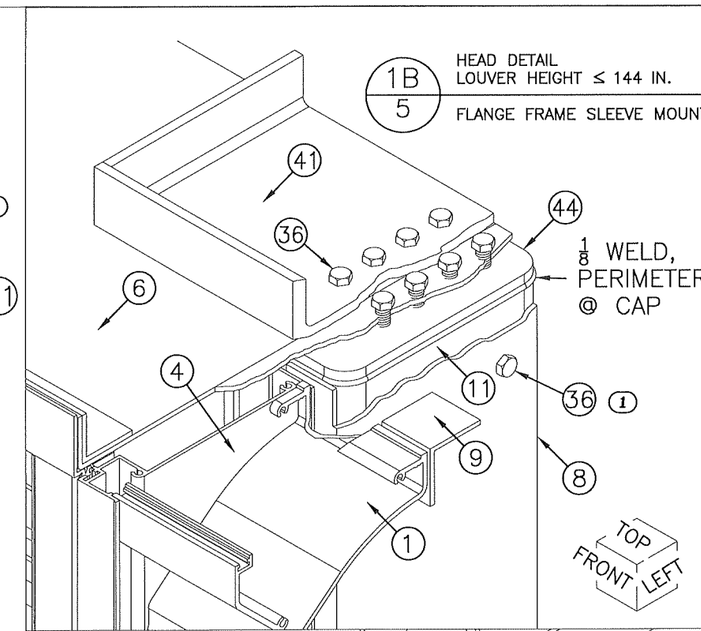

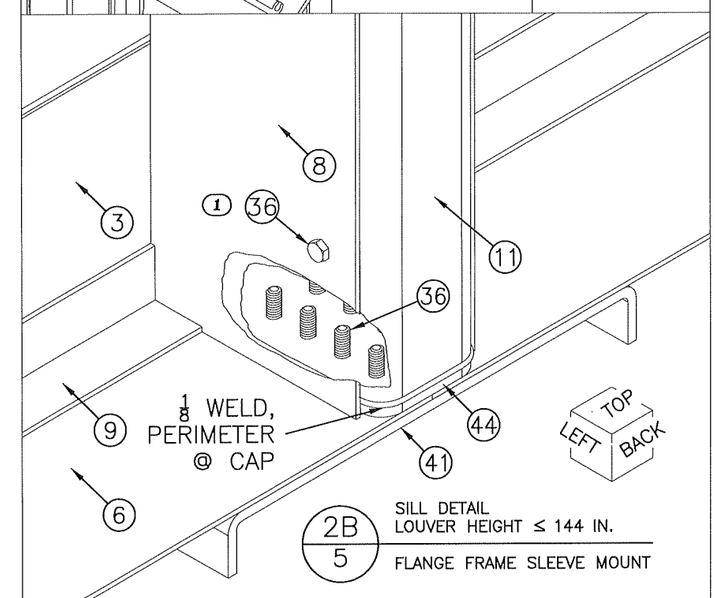

REV 01: 8/1/24, REMOVED "TYP" X4, ADDED ITEM 38 X2, ADDED MIN O.C. FOR ITEM 36 X2, ADDED CALLOUT FOR ITEM 36 X2, REMOVED ITEM 12, & ADDED HEAD WELD CALLOUT.

PRODUCT REVISED
as complying with the Florida Building Code
NOA-No. 24-0930.04
Expiration Date 12/06/2029
By
Miami-Dade Product Control

GREENHECK
P.O.BOX 410 SCHOFIELD, WISCONSIN 54476-0410

DRAWN BY MES	DATE 8/9/2017
SCALE	
SHEET NO. 5 OF 37	
CAD DRAWING NO. ESD-635D	
TITLE ESD-635D LOUVER FLANGE FRAME SLEEVE MOUNT HEAD & SILL DETAILS H≤144"	

WAYNE K. HELMILA
LICENSE
No. 59092
STATE OF FLORIDA
PROFESSIONAL ENGINEER

SEP 27 2024

RICE
ENGINEERING
105 School Creek Trail
Luxemburg, WI 54217
Phone: (920) 617-1042
Fax: (920) 617-1100
www.rice-inc.com
Florida Firm No: F-01000005061
Certificate of Authorization: #9090
Wayne K. Helmila
Registration No: 59092

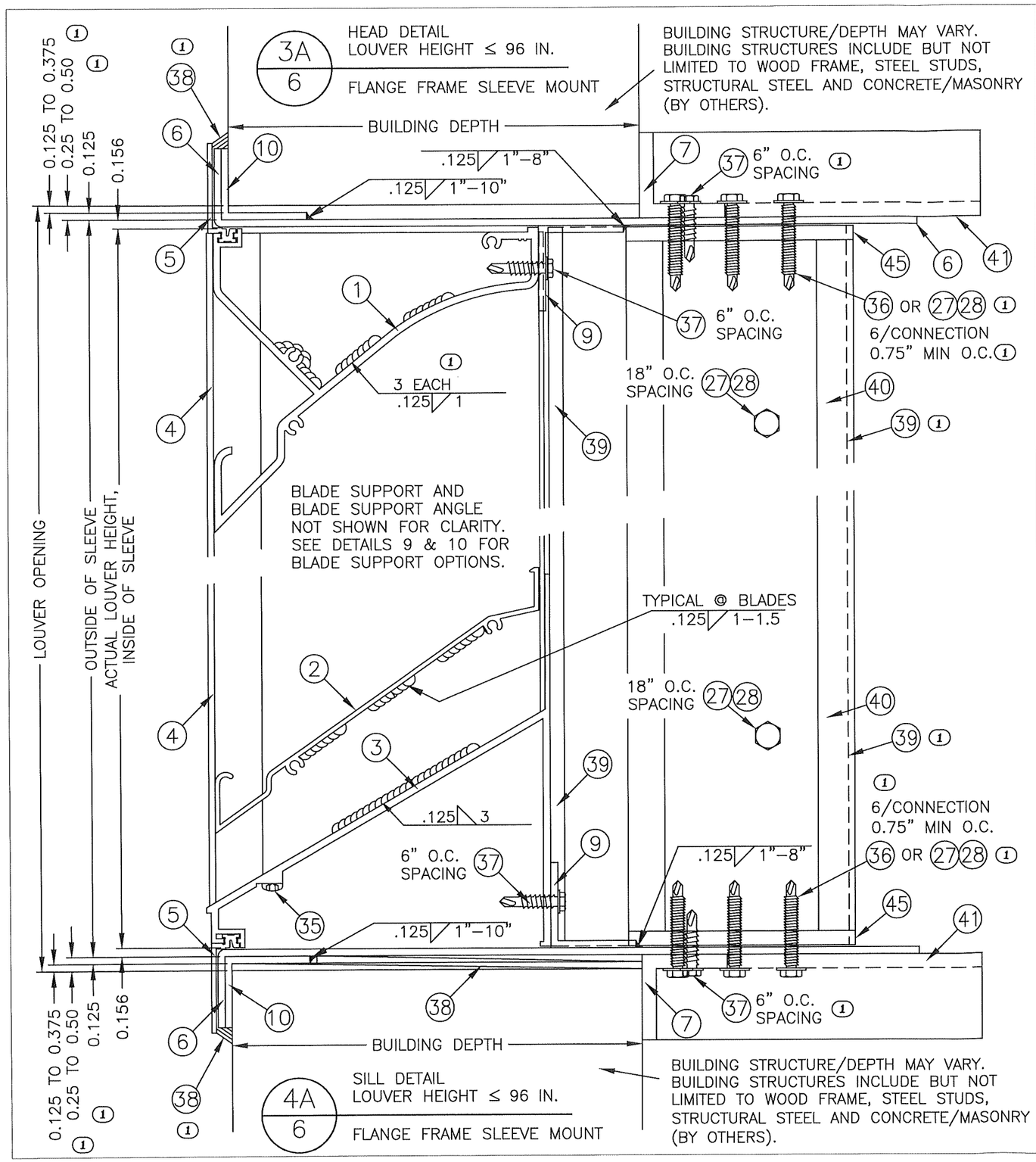

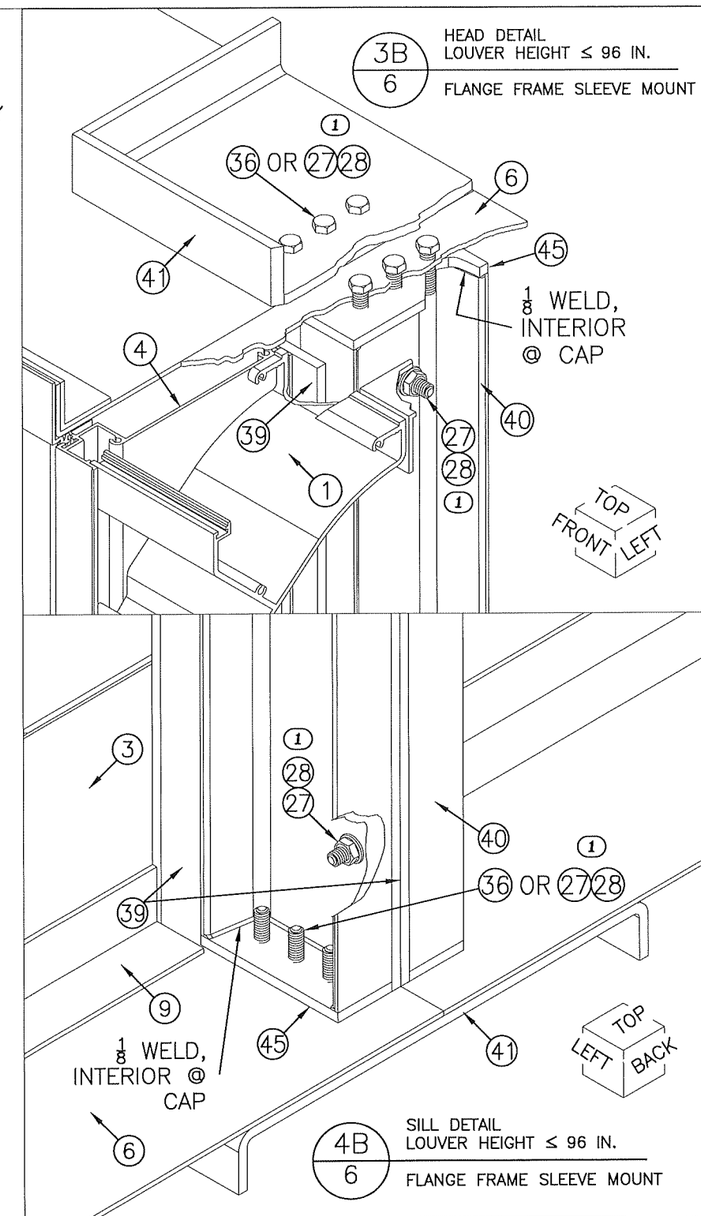

REV 01: 8/1/24, REMOVED "TYP" FROM EDGE GAP X4, ADDED ITEM 38 X2, ADDED MIN O.C. FOR ITEM 36 X2, ADDED ITEM 27 & 28 OPTION X4, ADDED ITEM 37 X2, REMOVED ITEM 12, & ADDED HEAD WELD CALLOUT.

PRODUCT REVISED
as complying with the Florida Building Code
NOA-No. 24-0930.04
Expiration Date 12/06/2029
By
Miami-Dade Product Control

GREENHECK
P.O.BOX 410 SCHOFIELD, WISCONSIN 54476-0410

DRAWN BY MES	DATE 8/9/2017
SCALE	
SHEET NO. 6 OF 37	
CAD DRAWING NO. ESD-635D	

TITLE
ESD-635D LOUVER
FLANGE FRAME SLEEVE MOUNT
HEAD & SILL DETAILS
H≤96"

WAYNE K. HELMILA
LICENSE
No. 59092
STATE OF FLORIDA
PROFESSIONAL ENGINEER

SEP 27 2024

RICE
ENGINEERING
105 School Creek Trail
Luxemburg, WI 54217
Phone: (920) 617-1042
Fax: (920) 617-1100
www.rice-inc.com
Florida Firm No: F-01000005061
Certificate of Authorization: #9090
Wayne K. Helmila
Registration No: 59092

REV 01: 8/1/24, MOVED DETAILS 7 & 8 TO A NEW PAGE, ADDED ITEM 38, ADDED MIN OFFSET, UPDATED ANCHOR NOTE X2, UPDATED ITEM 48 CALLOUT & LAYOUT, ADDED HEAD WELD CALLOUT, & REMOVED "TYP" FROM EDGE GAP X2.

5/7 HEAD DETAIL
LOUVER HEIGHT ≤ 144 IN.
CONTINUOUS ANGLE MOUNT

MULLION DIRECT MOUNT (SHOWN HERE AT HEAD) IS FOR SUBSTRATES WHERE MINIMUM ANCHOR EDGE DISTANCE CAN BE ACHIEVED BY USE OF HOLES IN THE MULLION END PLATE. DETAIL IS TYPICAL FOR BOTH HEAD & SILL CONDITIONS WHEN APPLICABLE.

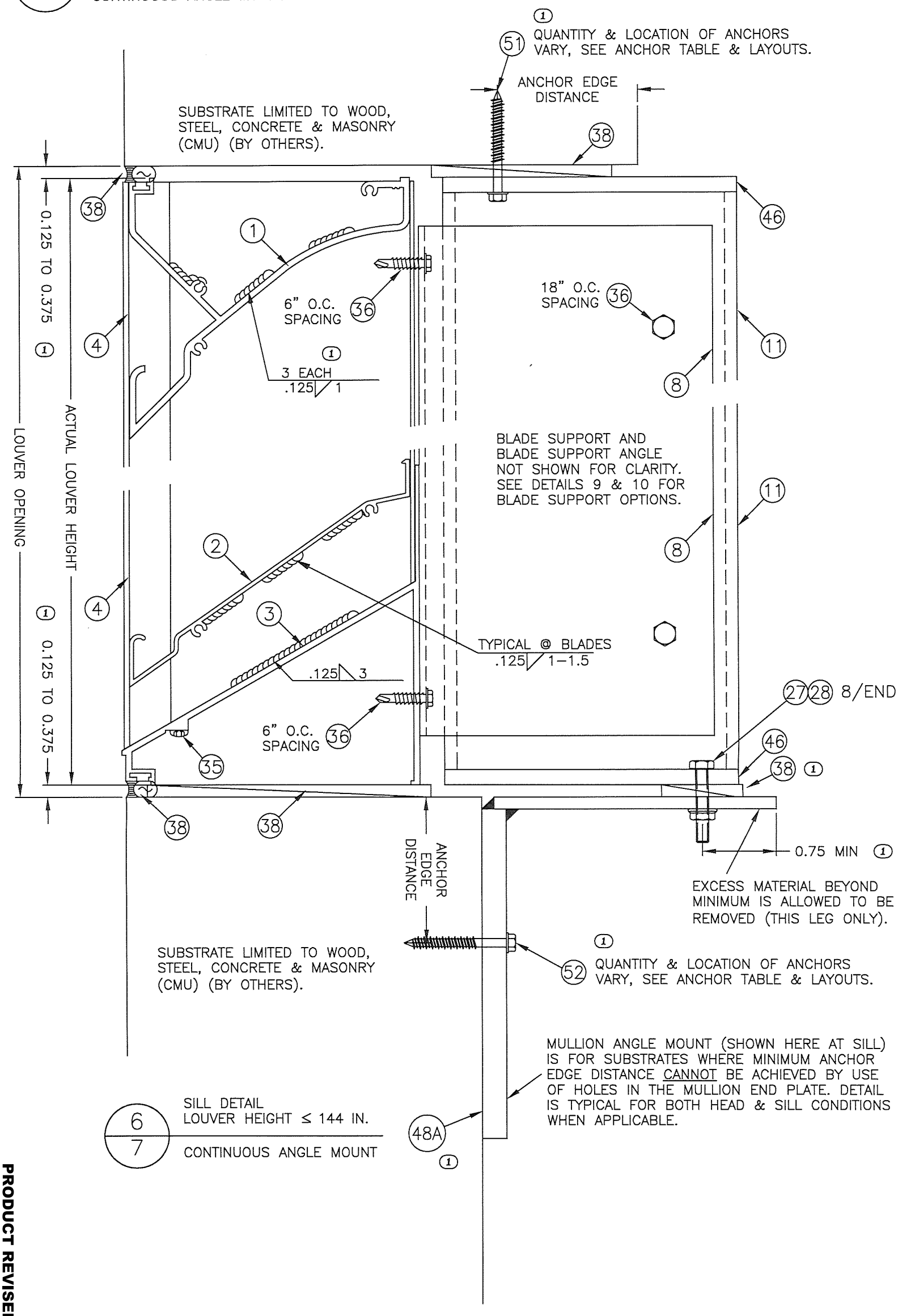

6/7 SILL DETAIL
LOUVER HEIGHT ≤ 144 IN.
CONTINUOUS ANGLE MOUNT

MULLION ANGLE MOUNT (SHOWN HERE AT SILL) IS FOR SUBSTRATES WHERE MINIMUM ANCHOR EDGE DISTANCE CANNOT BE ACHIEVED BY USE OF HOLES IN THE MULLION END PLATE. DETAIL IS TYPICAL FOR BOTH HEAD & SILL CONDITIONS WHEN APPLICABLE.

PRODUCT REVISED
as complying with the Florida Building Code
NOA-No. 24-0930.04
Expiration Date 12/06/2029
By
Miami-Dade Product Control

RICE ENGINEERING
105 School Creek Trail
Luxemburg, WI 54217
Phone: (920) 617-1042
Fax: (920) 617-1100
www.rice-inc.com
Florida Firm No: F-01000005061
Certificate of Authorization: #9090
Wayne K. Helmila
Registration No: 59092

SEP 27 2024

WAYNE K. HELMILA LICENSE No. 59092 STATE OF FLORIDA PROFESSIONAL ENGINEER

GREENHECK
P.O.BOX 410 SCHOFIELD, WISCONSIN 54476-0410

TITLE
ESD-635D LOUVER
CONTINUOUS ANGLE MOUNT
HEAD & SILL DETAILS
H≤144"

DRAWN BY MES	DATE 8/9/2017
SCALE	
SHEET NO. 7 OF 37	
CAD DRAWING NO. ESD-635D	

REV 01: 8/1/24, MOVED DETAILS 7 & 8 TO THIS NEW PAGE, ADDED ITEM 38, ADDED MIN OFFSET, UPDATED ANCHOR NOTE X2, UPDATED ITEM 48 CALLOUT & LAYOUT, ADDED HEAD WELD CALLOUT, & REMOVED "TYP" FROM EDGE GAP X2.

7/8 HEAD DETAIL
LOUVER HEIGHT ≤ 96 IN.
CONTINUOUS ANGLE MOUNT

MULLION DIRECT MOUNT (SHOWN HERE AT HEAD) IS FOR SUBSTRATES WHERE MINIMUM ANCHOR EDGE DISTANCE CAN BE ACHIEVED BY USE OF HOLES IN THE MULLION END PLATE. DETAIL IS TYPICAL FOR BOTH HEAD & SILL CONDITIONS WHEN APPLICABLE.

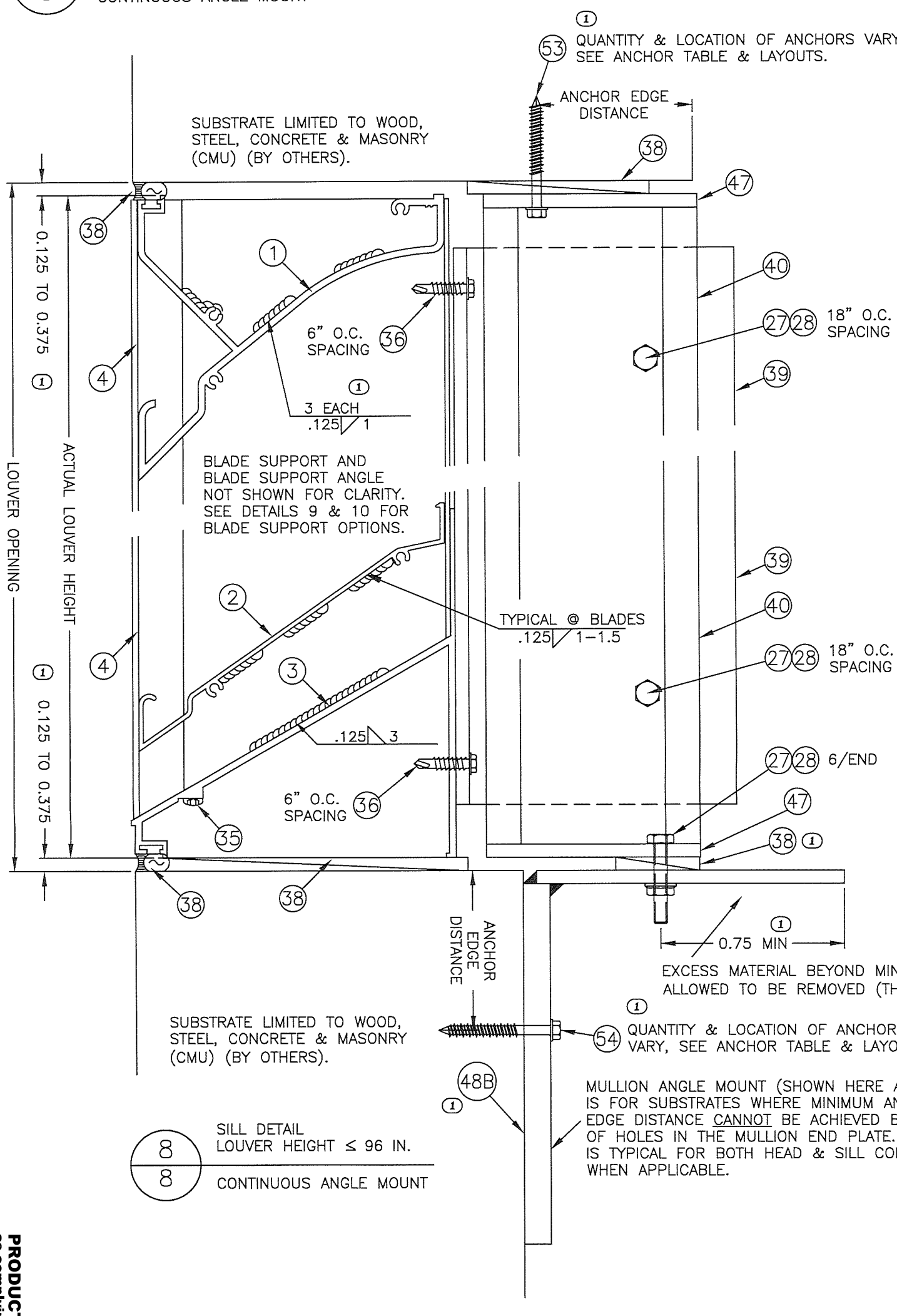

MULLION ANGLE MOUNT (SHOWN HERE AT SILL) IS FOR SUBSTRATES WHERE MINIMUM ANCHOR EDGE DISTANCE CANNOT BE ACHIEVED BY USE OF HOLES IN THE MULLION END PLATE. DETAIL IS TYPICAL FOR BOTH HEAD & SILL CONDITIONS WHEN APPLICABLE.

8/8 SILL DETAIL
LOUVER HEIGHT ≤ 96 IN.
CONTINUOUS ANGLE MOUNT

PRODUCT REVISED
as complying with the Florida Building Code
NOA-No. 24-0930.04
Expiration Date 12/06/2029
By
Miami-Dade Product Control

RICE
ENGINEERING
105 School Creek Trail
Luxemburg, WI 54217
Phone: (920) 617-1042
Fax: (920) 617-1100
www.rice-inc.com
Florida Firm No: F-01000005061
Certificate of Authorization: #9090
Wayne K. Helmila
Registration No: 59092

SEP 27 2024

WAYNE K. HELMILA
LICENSE
No. 59092
STATE OF FLORIDA
PROFESSIONAL ENGINEER

GREENHECK
P.O.BOX 410 SCHOFIELD, WISCONSIN 54476-0410

DRAWN BY MES	DATE 8/9/2017
SCALE	
TITLE: ESD-635D LOUVER CONTINUOUS ANGLE MOUNT HEAD & SILL DETAILS H≤96"	SHEET NO. 8 OF 37
	CAD DRAWING NO. ESD-635D

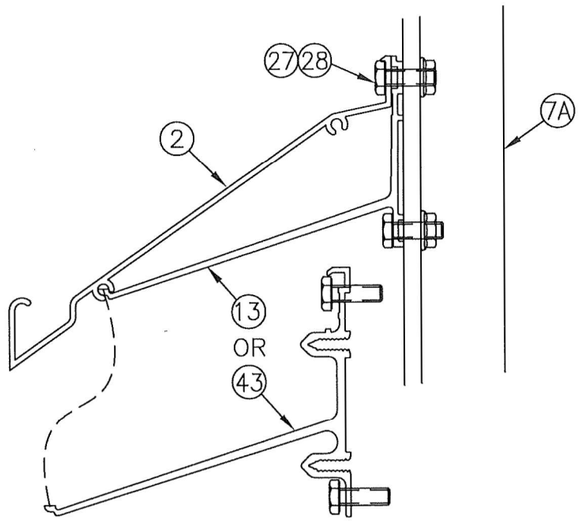

1 — 9/9

BLADE SUPPORT DETAIL
SECTION WIDTH > 36 IN.
LOUVER HEIGHT ≤ 144 IN.

FLANGE FRAME SLEEVE MOUNT,
& CONTINUOUS ANGLE MOUNT

BLADE & BRACKET ATTACHED TO SUPPORT ANGLE ONLY, TYPICAL STYLE AS SHOWN IN DETAIL 9

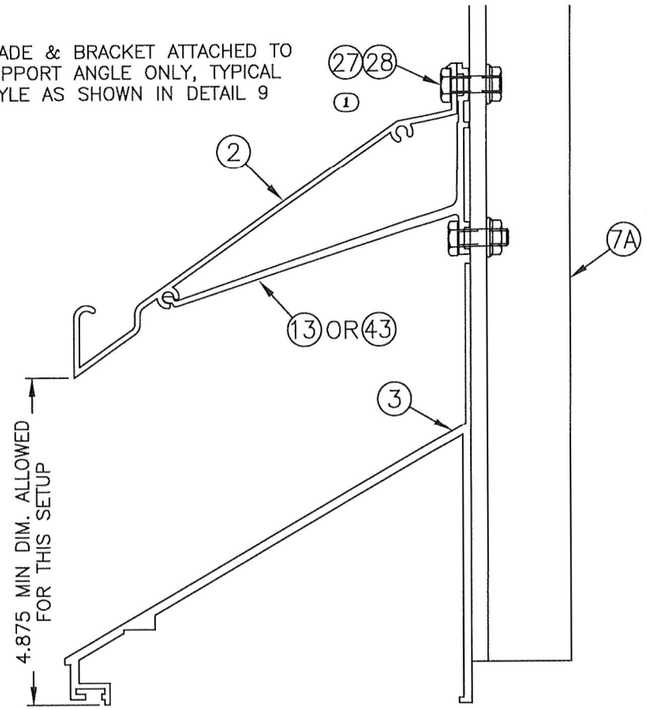

BLADE & MODIFIED BRACKET ATTACHED TO BLADE SUPPORT ANGLE ONLY

1 ITEM 7A IS NOT FASTENED TO HEAD & SILL

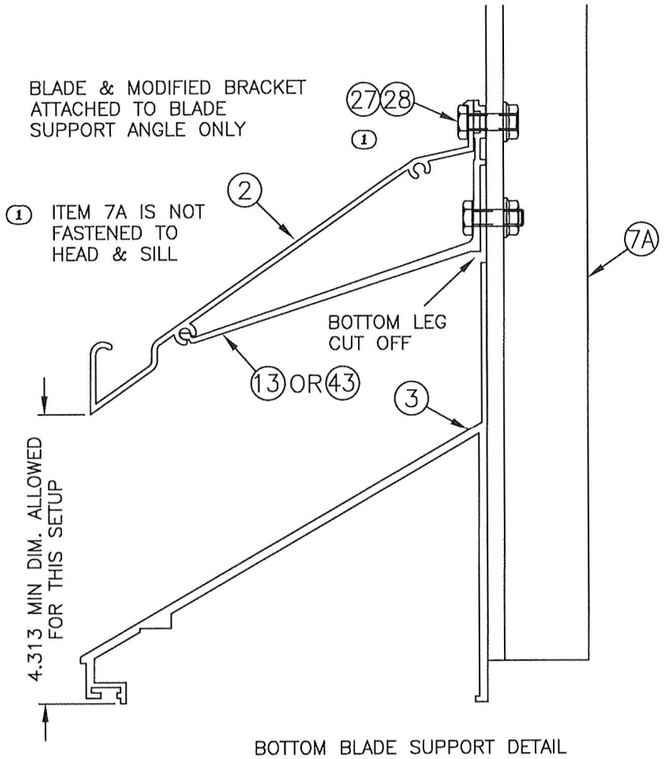

10 — 9

BOTTOM BLADE SUPPORT DETAIL
SECTION WIDTH > 36 IN.
LOUVER HEIGHT ≤ 144 IN.

FLANGE FRAME SLEEVE MOUNT,
& CONTINUOUS ANGLE MOUNT

NOTE: THE BLADE SUPPORT ANGLE (ITEM 7A) IS NOT SHOWN IN THE BOTTOM THREE DETAILS IN ORDER TO IMPROVE DETAIL CLARITY. THE BLADE SUPPORT ANGLE IS NOT ATTACHED TO THE BLADE SUPPORT BRACKET (ITEM 13 OR 43) IN THE BOTTOM THREE DETAILS AS THE BRACKET IS ATTACHED TO THE SILL INSTEAD. BLADE SUPPORT BRACKET ITEM 43 CAN REPLACE BLADE SUPPORT BRACKET 13 (SHOWN) IN ANY OF THE DRAWINGS FOR DETAIL 10.

BLADE & BRACKET ATTACHED TO SILL ONLY

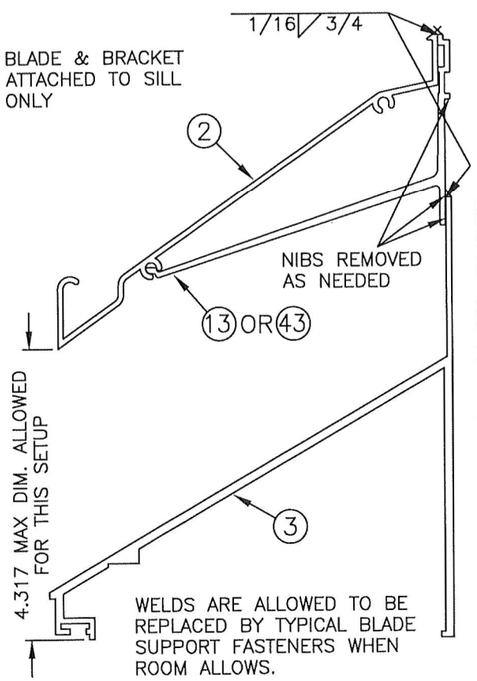

WELDS ARE ALLOWED TO BE REPLACED BY TYPICAL BLADE SUPPORT FASTENERS WHEN ROOM ALLOWS.

BLADE & MODIFIED BRACKET ATTACHED TO SILL ONLY

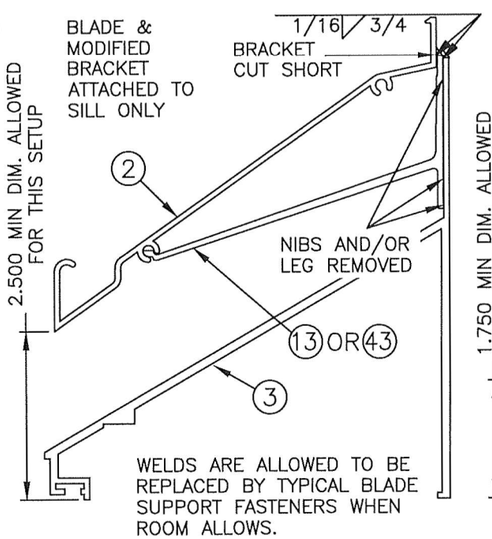

WELDS ARE ALLOWED TO BE REPLACED BY TYPICAL BLADE SUPPORT FASTENERS WHEN ROOM ALLOWS.

BLADE & MODIFIED BRACKET ATTACHED TO SILL ONLY

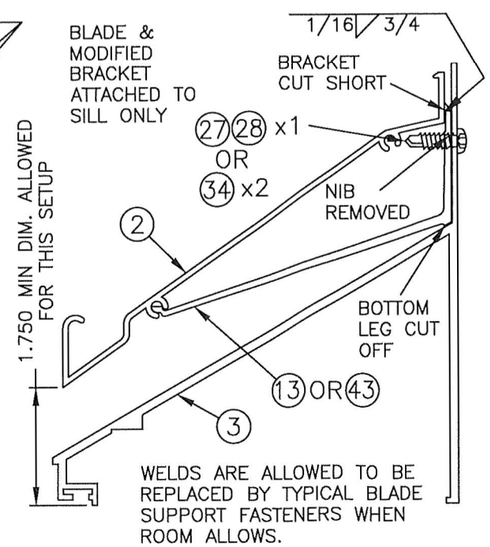

WELDS ARE ALLOWED TO BE REPLACED BY TYPICAL BLADE SUPPORT FASTENERS WHEN ROOM ALLOWS.

REV 01: 9/25/23, WAS PAGE 8, COMBINED DETAILS 9A & 9B INTO ONE DETAIL 9, ITEMS 27 & 28 NOW THE ONLY FASTENER OPTION FOR THE NON-WELDED OPTIONS OF DETAIL 10, & ADDED 7A NOTE.

PRODUCT REVISED
as complying with the Florida Building Code
NOA-No. 24-0930.04
Expiration Date 12/06/2029
By
Miami-Dade Product Control

GREENHECK
P.O.BOX 410 SCHOFIELD, WISCONSIN 54476-0410

TITLE: ESD-635D LOUVER CONTINUOUS ANGLE MOUNT HEAD & SILL DETAILS H≤96"

DRAWN BY: MES
DATE: 8/9/2017
SCALE:
SHEET NO.: 9 OF 37
CAD DRAWING NO.: ESD-635D

WAYNE K. HELMILA
LICENSE
No. 59092
STATE OF FLORIDA
PROFESSIONAL ENGINEER

SEP 27 2024

RICE
ENGINEERING
105 School Creek Trail
Luxemburg, WI 54217
Phone: (920) 617-1042
Fax: (920) 617-1100
www.rice-inc.com
Florida Firm No: F-01000005061
Certificate of Authorization: #9090
Wayne K. Helmila
Registration No: 59092

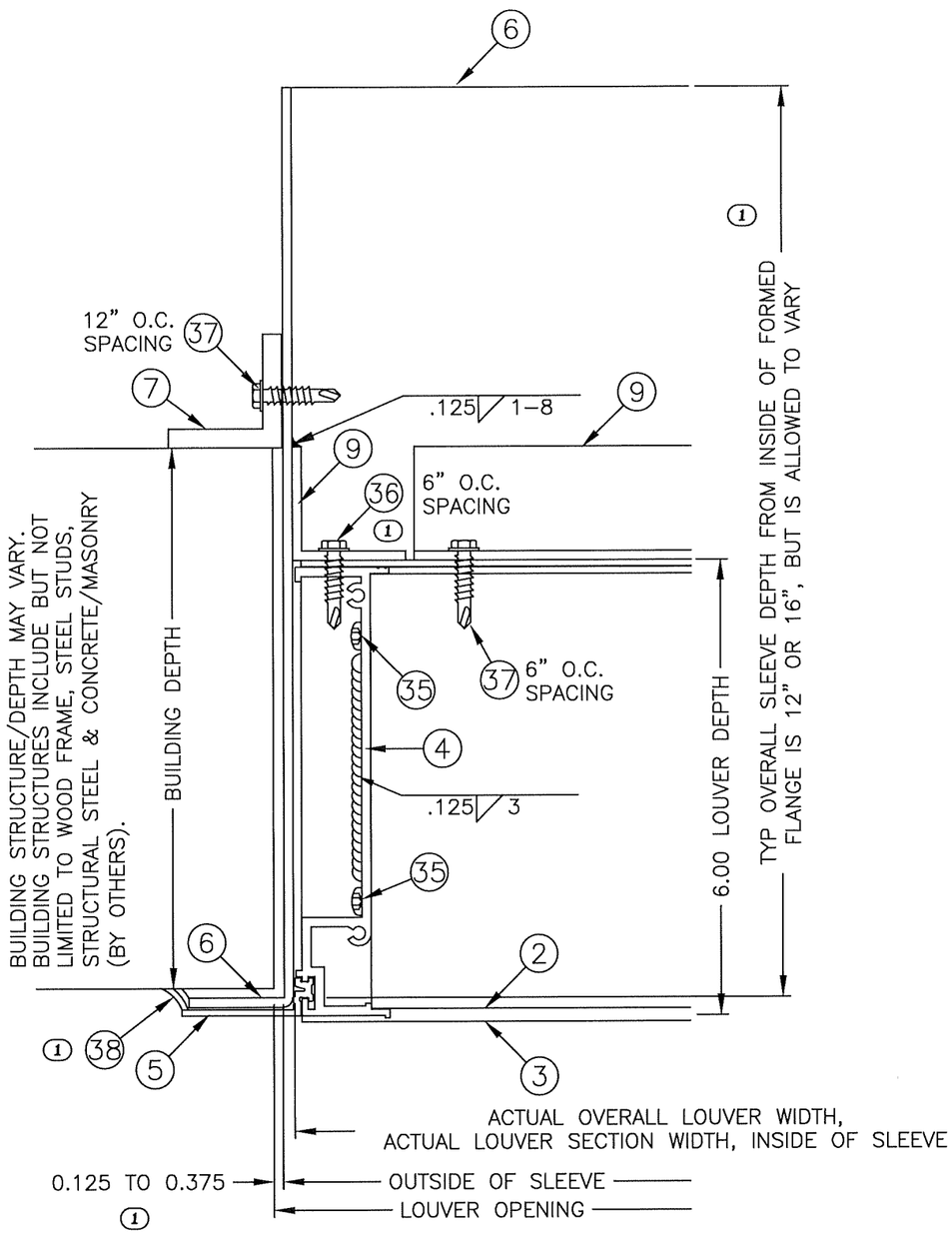

11 / 10 JAMB DETAIL
LOUVER HEIGHT ≤ 144 IN.
FLANGE FRAME SLEEVE MOUNT

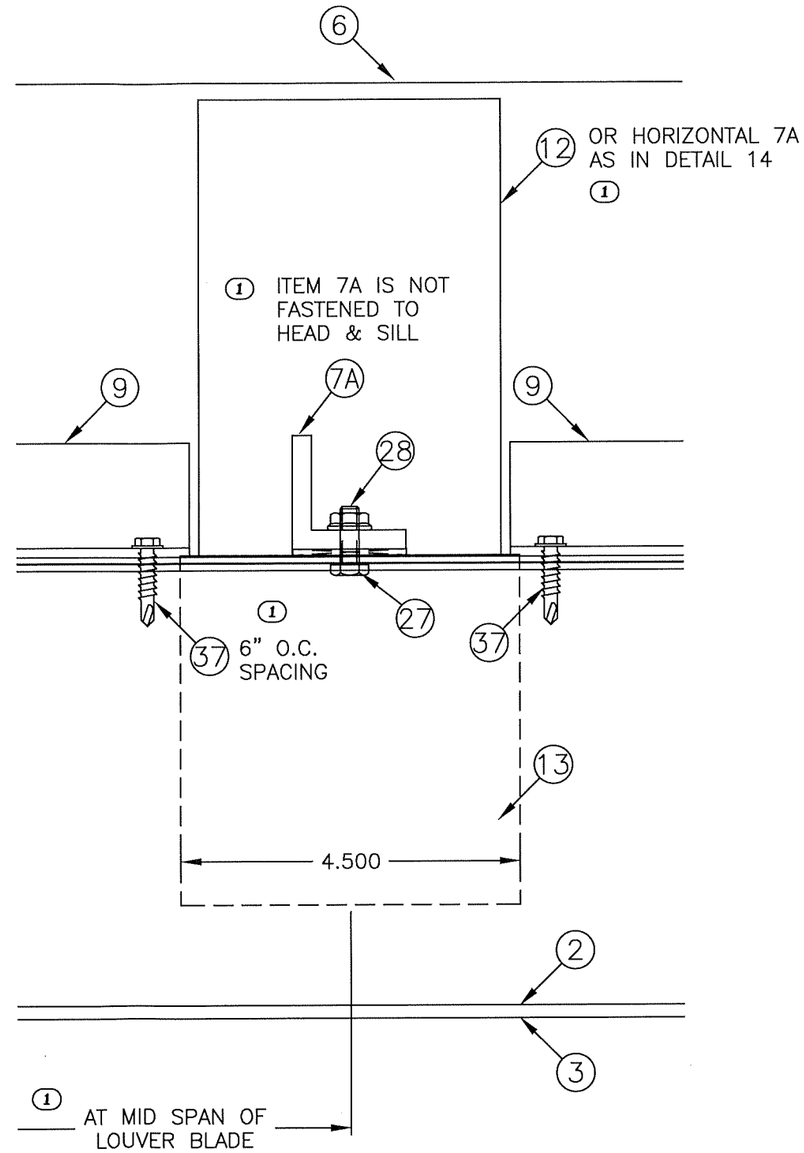

12 / 10 SUPPORT DETAIL
SECTION WIDTH > 36 IN.
LOUVER HEIGHT ≤ 144 IN.
FLANGE FRAME SLEEVE MOUNT

PRODUCT REVISED
as complying with the Florida Building Code
NOA-No. 24-0930.04
Expiration Date 12/06/2029
By
Miami-Dade Product Control

REV 01: 8/1/24, WAS PAGE 9, REMOVED DETAIL 12B, ADDED SLEEVE & LOUVER DEPTH DIMS, REPLACED ITEM 37 WITH ITEM 36, ADDED ITEM 7A OPTION, ADDED ON CENTER, ADDED ITEM 7 NOTE, ADDED ITEM 38, ADDED MID SPAN DIM, & REMOVED "TYP" FROM EDGE GAP.

DRAWN BY MES | DATE 8/9/2017
SCALE
SHEET NO. 10 OF 37
CAD DRAWING NO. ESD-635D

GREENHECK
P.O.BOX 410 SCHOFIELD, WISCONSIN 54476-0410

TITLE ESD-635D LOUVER
FLANGE FRAME SLEEVE MOUNT
JAMB & SUPPORT DETAILS
H≤144"

WAYNE K. HELMILA
LICENSE
No. 59092
STATE OF
FLORIDA
PROFESSIONAL ENGINEER

AUG 19 2024

RICE
ENGINEERING
105 School Creek Trail
Luxemburg, WI 54217
Phone: (920) 617-1042
Fax: (920) 617-1100
www.rice-inc.com
Florida Firm No: F-01000005061
Certificate of Authorization: #9090
Wayne K. Helmila
Registration No: 59092

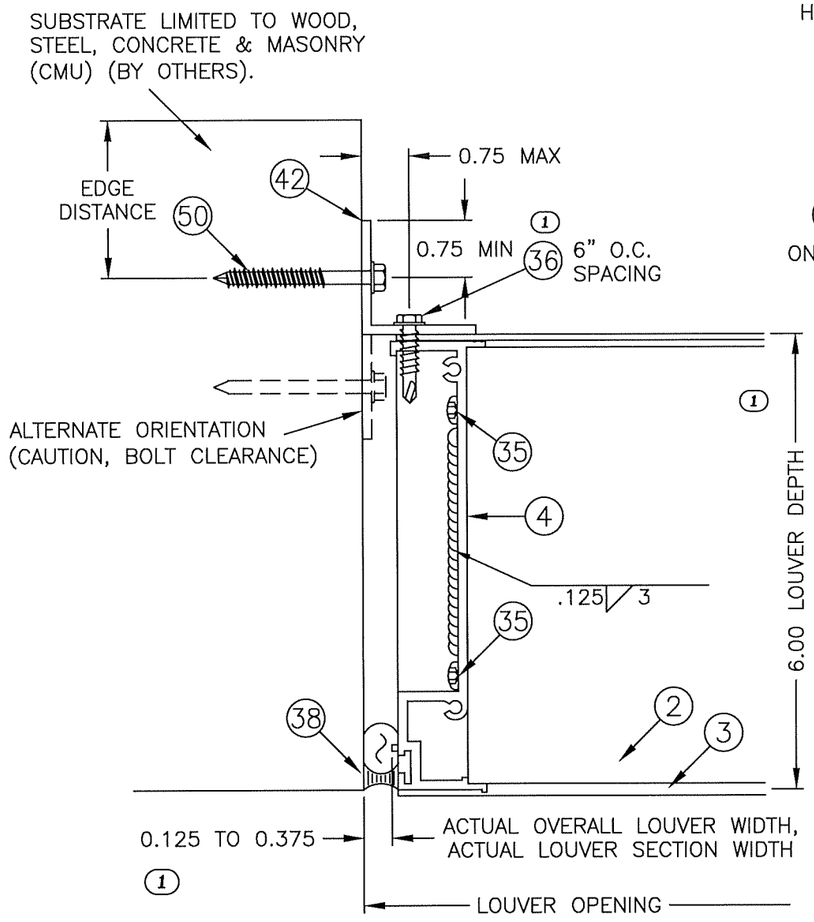

13 / 11 JAMB DETAIL
LOUVER HEIGHT ≤ 144 IN.
CONTINUOUS ANGLE MOUNT

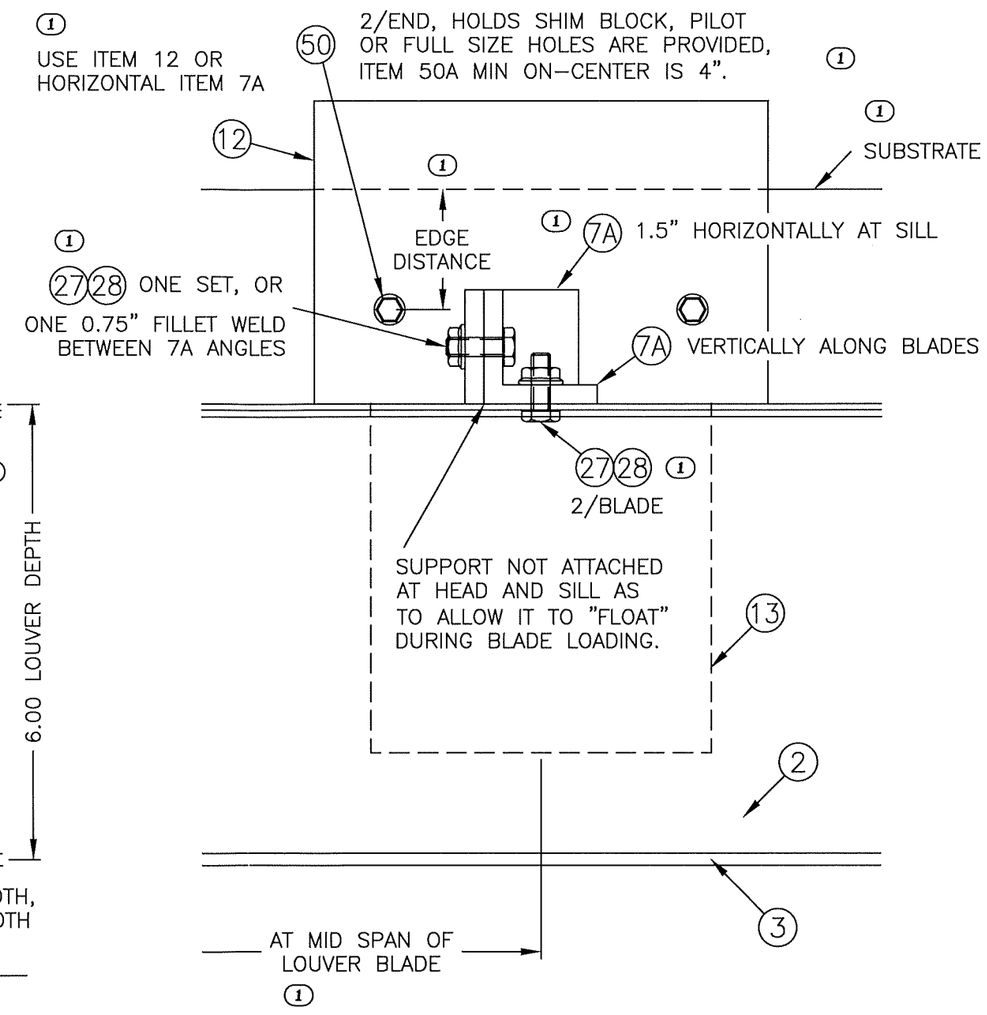

14 / 11 SUPPORT DETAIL
LOUVER HEIGHT ≤ 144 IN.
CONTINUOUS ANGLE MOUNT

PRODUCT REVISED
as complying with the Florida Building Code
NOA-No. 24-0930.04
Expiration Date 12/06/2029
By
Miami-Dade Product Control

REV 01: 8/1/24, WAS PAGE 10, REMOVED DETAIL 14B, REPLACED ITEM 37 WITH ITEM 36, ADDED ITEM 7A HORIZONTAL OPTION & FASTENING, ADDED DEPTH & EDGE & MID SPAN DIMS, ADDED SUBSTRATE, ADDED ITEM 50A NOTE, CLARIFIED NUMBER OF BOLTS, & REMOVED "TYP" FROM EDGE GAP.

DRAWN BY MES | DATE 8/9/2017
SCALE
SHEET NO. 11 OF 37
CAD DRAWING NO. ESD-635D

GREENHECK
P.O.BOX 410 SCHOFIELD, WISCONSIN 54476-0410

TITLE
ESD-635D LOUVER
CONTINUOUS ANGLE MOUNT
JAMB & SUPPORT DETAILS
H≤144"

WAYNE K. HELMILA
LICENSE
No. 59092
STATE OF FLORIDA
PROFESSIONAL ENGINEER

AUG 19 2024

RICE
ENGINEERING
105 School Creek Trail
Luxemburg, WI 54217
Phone: (920) 617-1042
Fax: (920) 617-1100
www.rice-inc.com
Florida Firm No: F-01000005061
Certificate of Authorization: #9090
Wayne K. Helmila
Registration No: 59092

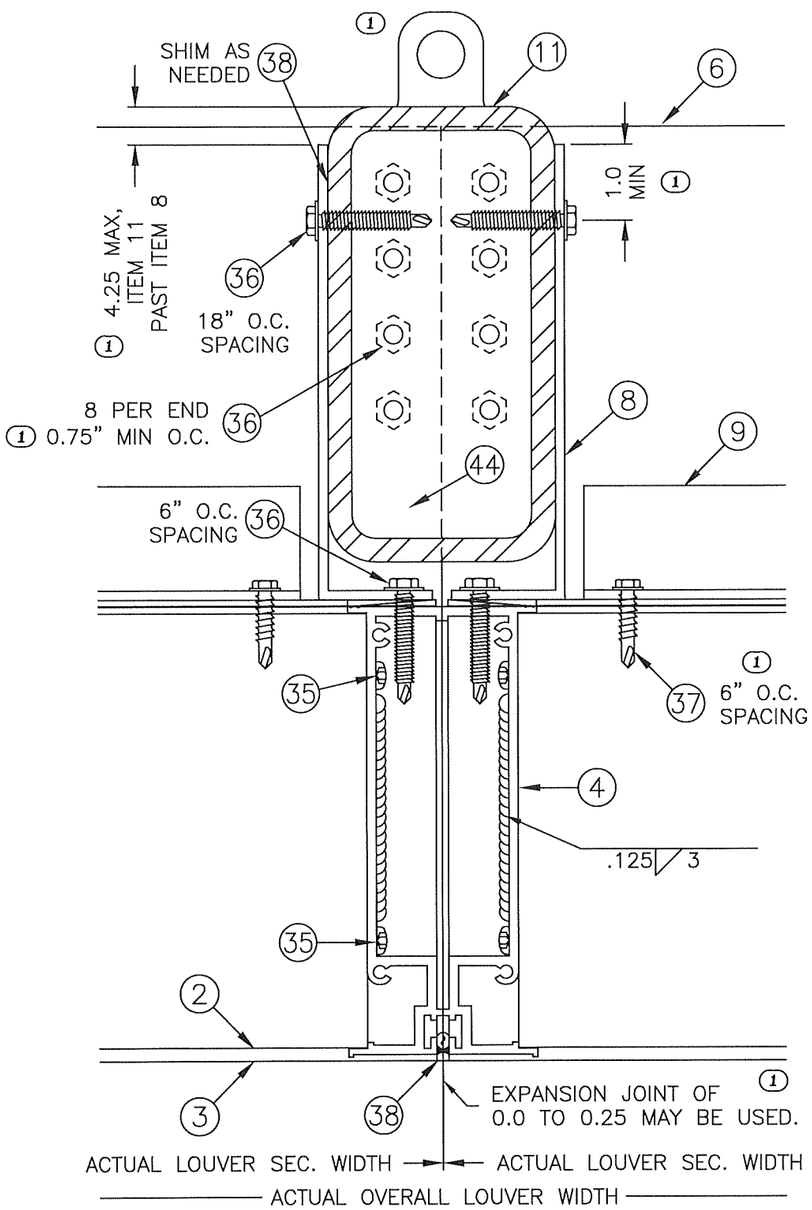

15A / 12 MULLION DETAIL
LOUVER HEIGHT ≤ 144 IN.
FLANGE FRAME SLEEVE MOUNT

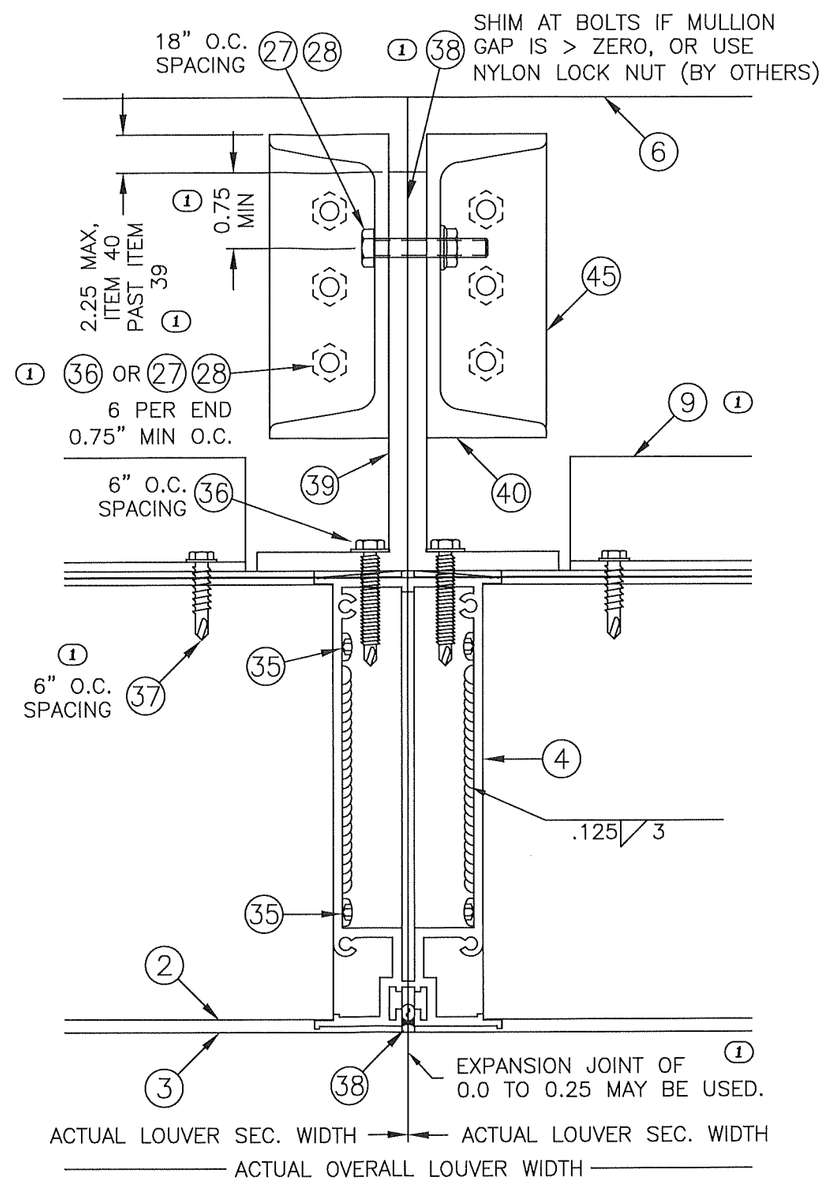

15B / 12 MULLION DETAIL
LOUVER HEIGHT ≤ 96 IN.
FLANGE FRAME SLEEVE MOUNT

PRODUCT REVISED
as complying with the Florida Building Code
NOA-No. 24-0930.04
Expiration Date 12/06/2029
By
Miami-Dade Product Control

DRAWN BY MES	DATE 8/9/2017
SCALE	
SHEET NO. 12 OF 37	CAD DRAWING NO. ESD-635D

GREENHECK
P.O.BOX 410 SCHOFIELD, WISCONSIN 54476-0410

TITLE
ESD-635D LOUVER
FLANGE FRAME SLEEVE MOUNT
MULLION DETAILS
H≤144" & H≤96"

WAYNE K. HELMILA
LICENSE
No. 59092
STATE OF FLORIDA
PROFESSIONAL ENGINEER

SEP 27 2024

RICE
ENGINEERING
105 School Creek Trail
Luxemburg, WI 54217
Phone: (920) 617-1042
Fax: (920) 617-1100
www.rice-inc.com
Florida Firm No: F-01000005061
Certificate of Authorization: #9090
Wayne K. Helmila
Registration No: 59092

REV 01: 8/1/24, WAS PAGE 11, ADDED LIFTING LUG, REDEFINED ITEM 11 & 40 MAX OFFSETS, ADDED 0.75 & 1.0 MIN OFFSETS, ADDED ITEM 38 CALLOUT, ADDED ON CENTERS OF 6" X2 & 0.75" X1, ADDED ITEM 9 CALLOUT, ADDED ITEM 27/28 CALLOUT WITH ITEM 36 OPTION, & REWORDED MULLION GAP NOTE X2.

MULLION DIRECT MOUNT (SHOWN HERE AT SILL) IS FOR SUBSTRATES WHERE MINIMUM ANCHOR EDGE DISTANCE CAN BE ACHIEVED BY USE OF HOLES IN THE MULLION END PLATE (ITEM 46). DETAIL IS TYPICAL FOR BOTH HEAD & SILL CONDITIONS WHEN APPLICABLE.

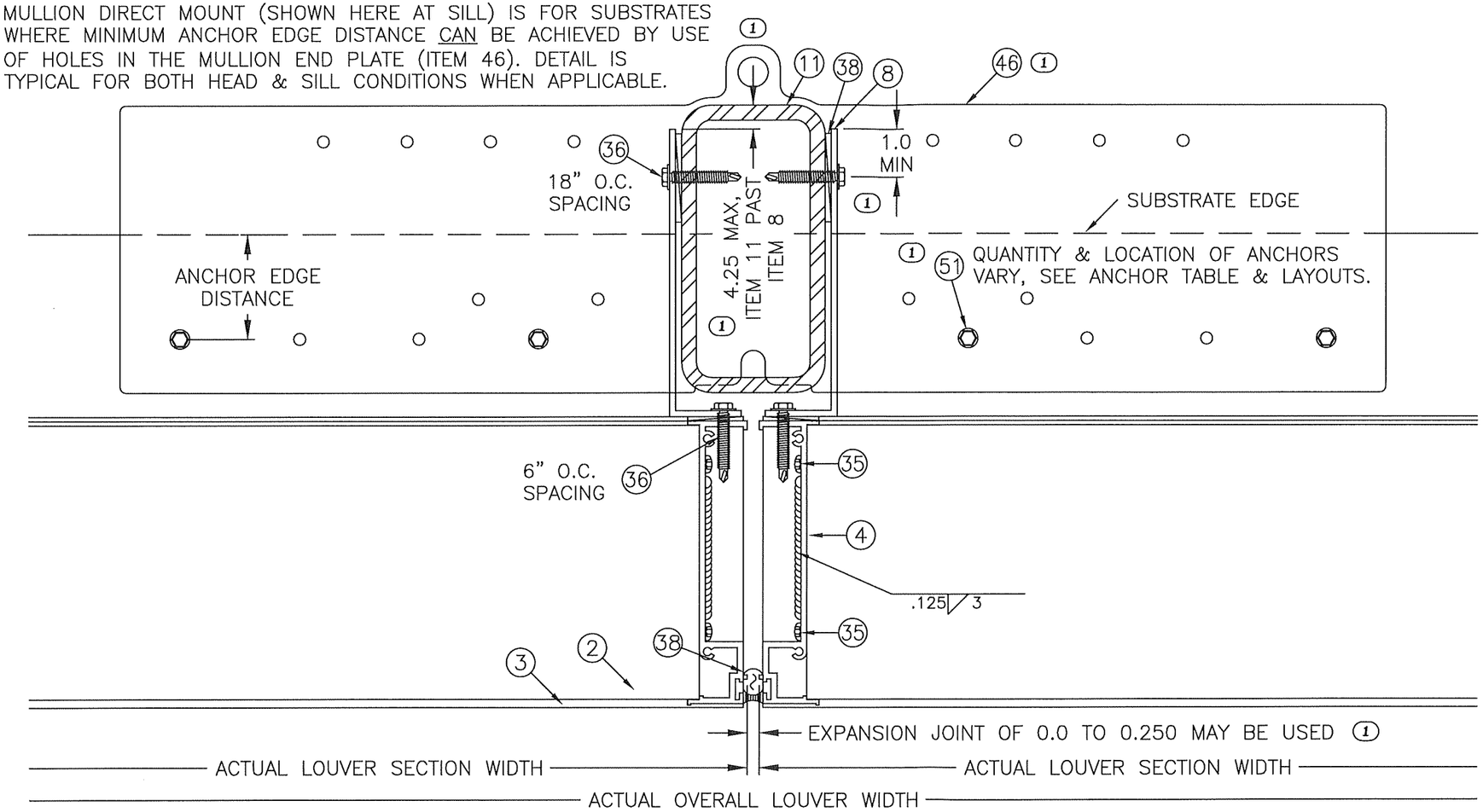

16A / 13

MULLION DETAIL, W/ END PLATE MOUNTING
LOUVER HEIGHT ≤ 144 IN.

CONTINUOUS ANGLE MOUNT

REV 01: 8/1/24, WAS PAGE 12, MOVED DETAIL 16B TO A NEW PAGE, ADDED LIFTING LUG, REPLACED ITEM 46 WITH UPDATED DESIGN, REDEFINED ITEM 11 MAX OFFSET, ADDED 1.0 MIN OFFSET, UPDATED ANCHOR REFERENCE NOTE, & REWORDED MULLION GAP NOTE.

PRODUCT REVISED
as complying with the Florida Building Code
NOA-No. 24-0930.04
Expiration Date 12/06/2029
By
Miami-Dade Product Control

DRAWN BY MES
DATE 8/9/2017
SCALE
SHEET NO. 13 OF 37
CAD DRAWING NO. ESD-635D

GREENHECK
P.O.BOX 410 SCHOFIELD, WISCONSIN 54476-0410

TITLE
ESD-635D LOUVER
CONTINUOUS ANGLE MOUNT
MULLION DETAILS WITH END
PLATE MOUNTING, H≤144"

WAYNE K. HELMILA
LICENSE
No. 59092
STATE OF FLORIDA
PROFESSIONAL ENGINEER

SEP 27 2024

RICE
ENGINEERING
105 School Creek Trail
Luxemburg, WI 54217
Phone: (920) 617-1042
Fax: (920) 617-1100
www.rice-inc.com
Florida Firm No: F-01000005061
Certificate of Authorization: #9090
Wayne K. Helmila
Registration No: 59092

MULLION DIRECT MOUNT (SHOWN HERE AT SILL) IS FOR SUBSTRATES WHERE MINIMUM ANCHOR EDGE DISTANCE CANNOT BE ACHIEVED BY USE OF HOLES IN THE MULLION END PLATE (ITEM 46). DETAIL IS TYPICAL FOR BOTH HEAD & SILL CONDITIONS WHEN APPLICABLE.

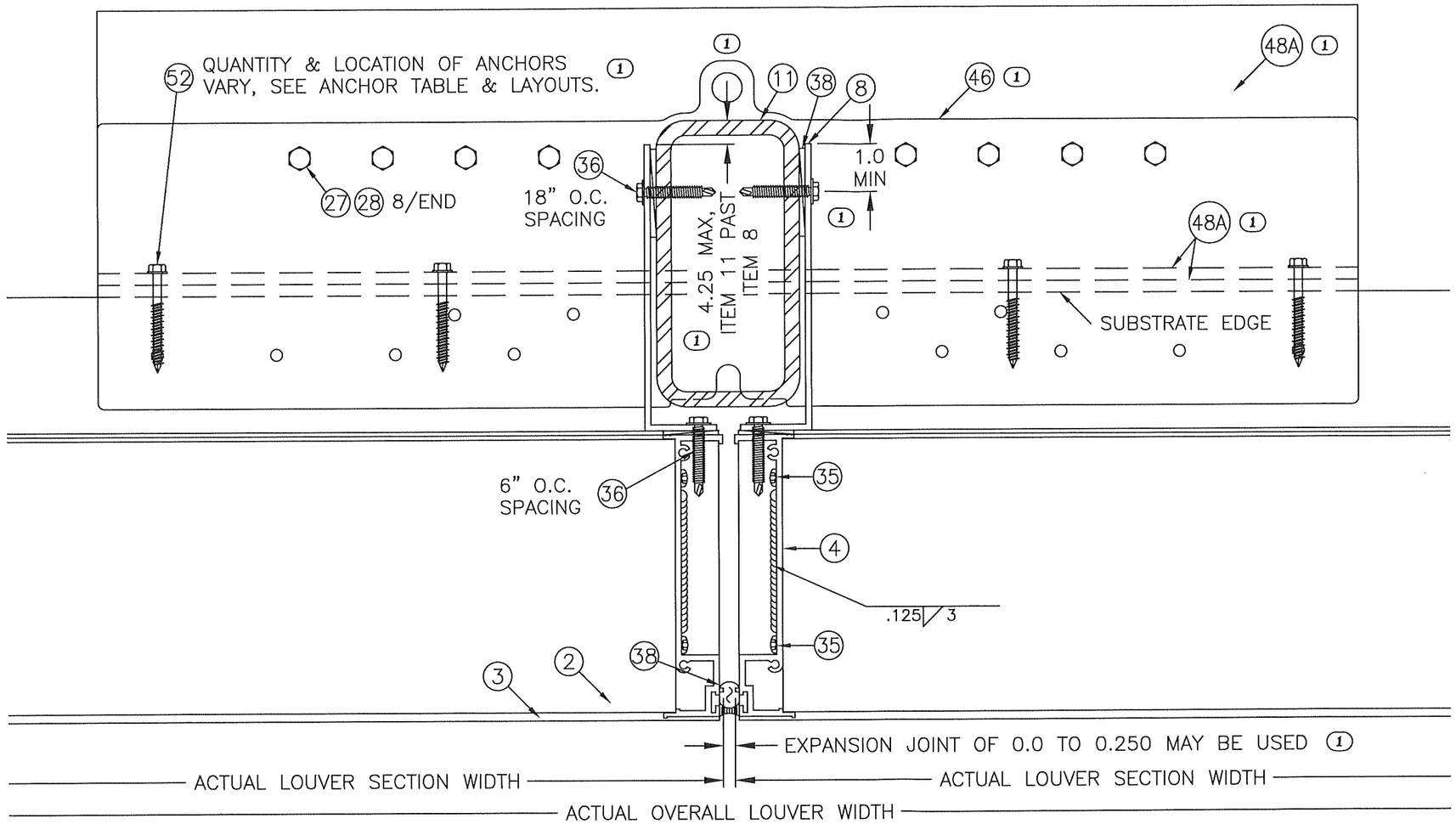

16B / 14

MULLION DETAIL, W/ MULLION ANGLE MOUNTING
LOUVER HEIGHT ≤ 144 IN.

CONTINUOUS ANGLE MOUNT

REV 01: 8/1/24, MOVED DETAIL 16B TO THIS NEW PAGE, ADDED LIFTING LUG, REPLACED ITEMS 46 & 48A WITH UPDATED DESIGNS, REDEFINED ITEM 11 OFFSET, ADDED 1.0 MIN OFFSET, UPDATED ANCHOR REFERENCE NOTE, & REWORDED MULLION GAP NOTE.

PRODUCT REVISED
as complying with the Florida Building Code
NOA-No. 24-0930.04
Expiration Date 12/06/2029
By
Miami-Dade Product Control

DRAWN BY MES | DATE 8/9/2017
SCALE
SHEET NO. 14 OF 37
CAD DRAWING NO. ESD-635D

GREENHECK
P.O.BOX 410 SCHOFIELD, WISCONSIN 54476-0410

TITLE
ESD-635D LOUVER
CONTINUOUS ANGLE MOUNT
MULLION DETAILS WITH MULLION ANGLE MOUNTING, H≤144"

WAYNE K. HELMILA
LICENSE
No. 59092
STATE OF FLORIDA
PROFESSIONAL ENGINEER

SEP 27 2024

RICE
ENGINEERING
105 School Creek Trail
Luxemburg, WI 54217
Phone: (920) 617-1042
Fax: (920) 617-1100
www.rice-inc.com
Florida Firm No: F-01000005061
Certificate of Authorization: #9090
Wayne K. Helmila
Registration No: 59092

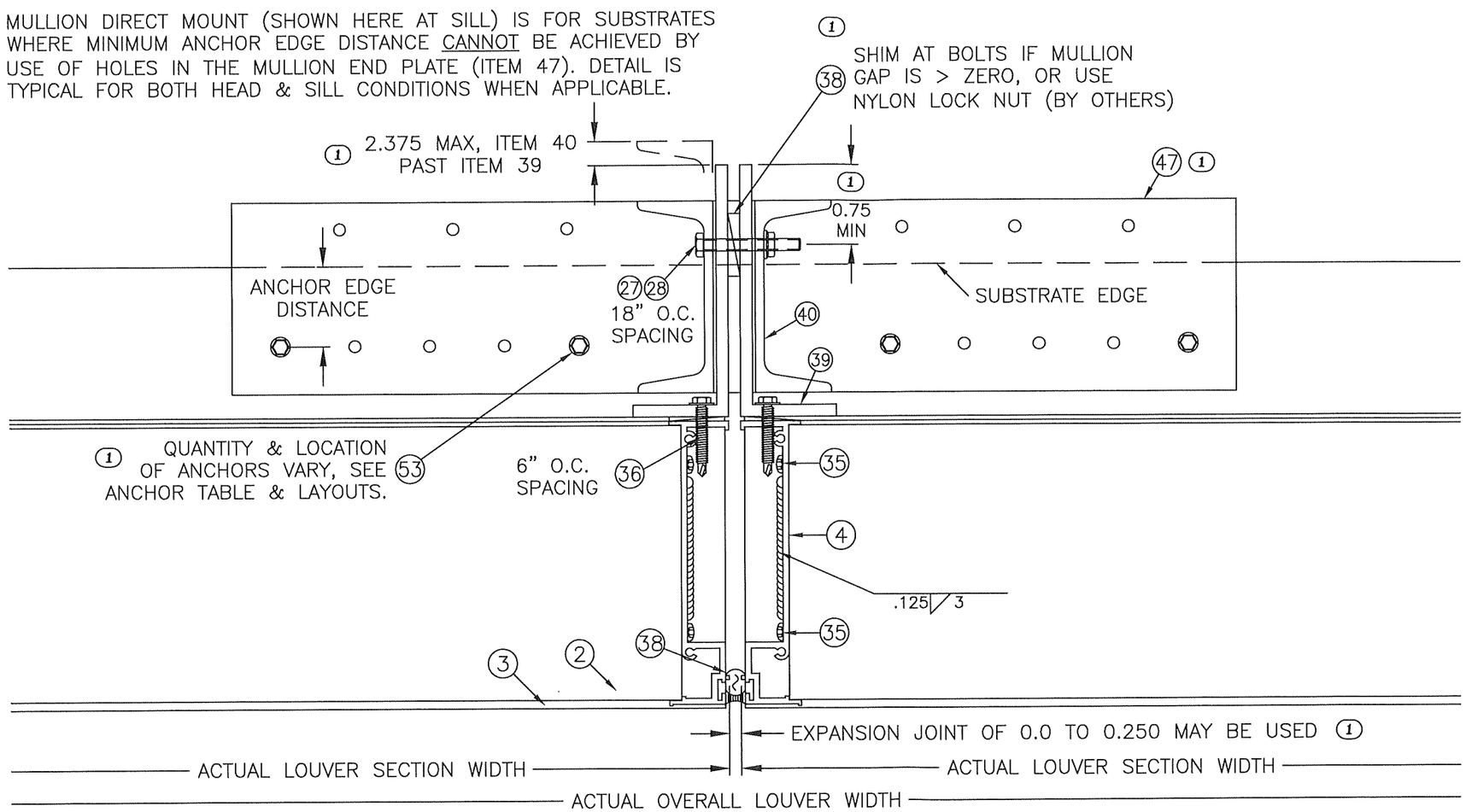

17A / 15

MULLION DETAIL, W/ END PLATE MOUNTING
LOUVER HEIGHT ≤ 96 IN.

CONTINUOUS ANGLE MOUNT

REV 01: 8/1/24, WAS PAGE 13, MOVED DETAIL 17B TO A NEW PAGE, REPLACED ITEM 47 WITH UPDATED DESIGN, REDEFINED ITEM 40 MAX OFFSET, ADDED 0.75 MIN OFFSET, ADDED ITEM 38 & NOTE, UPDATED ANCHOR REFERENCE NOTE, & REWORDED MULLION GAP NOTE.

PRODUCT REVISED
as complying with the Florida Building Code
NOA-No. 24-0930.04
Expiration Date 12/06/2029
By
Miami-Dade Product Control

DRAWN BY MES | DATE 8/9/2017
SCALE
SHEET NO. 15 OF 37
CAD DRAWING NO. ESD-635D

GREENHECK
P.O.BOX 410 SCHOFIELD, WISCONSIN 54476-0410

TITLE
ESD-635D LOUVER
CONTINUOUS ANGLE MOUNT
MULLION DETAILS WITH MULLION
END PLATE MOUNTING, H≤96"

WAYNE K. HELMILA
LICENSE
No. 59092
STATE OF FLORIDA
PROFESSIONAL ENGINEER

SEP 27 2024

RICE
ENGINEERING
105 School Creek Trail
Luxemburg, WI 54217
Phone: (920) 617-1042
Fax: (920) 617-1100
www.rice-inc.com
Florida Firm No: F-01000005061
Certificate of Authorization: #9090
Wayne K. Helmila
Registration No: 59092

MULLION DIRECT MOUNT (SHOWN HERE AT SILL) IS FOR SUBSTRATES WHERE MINIMUM ANCHOR EDGE DISTANCE CANNOT BE ACHIEVED BY USE OF HOLES IN THE MULLION END PLATE (ITEM 47). DETAIL IS TYPICAL FOR BOTH HEAD & SILL CONDITIONS WHEN APPLICABLE.

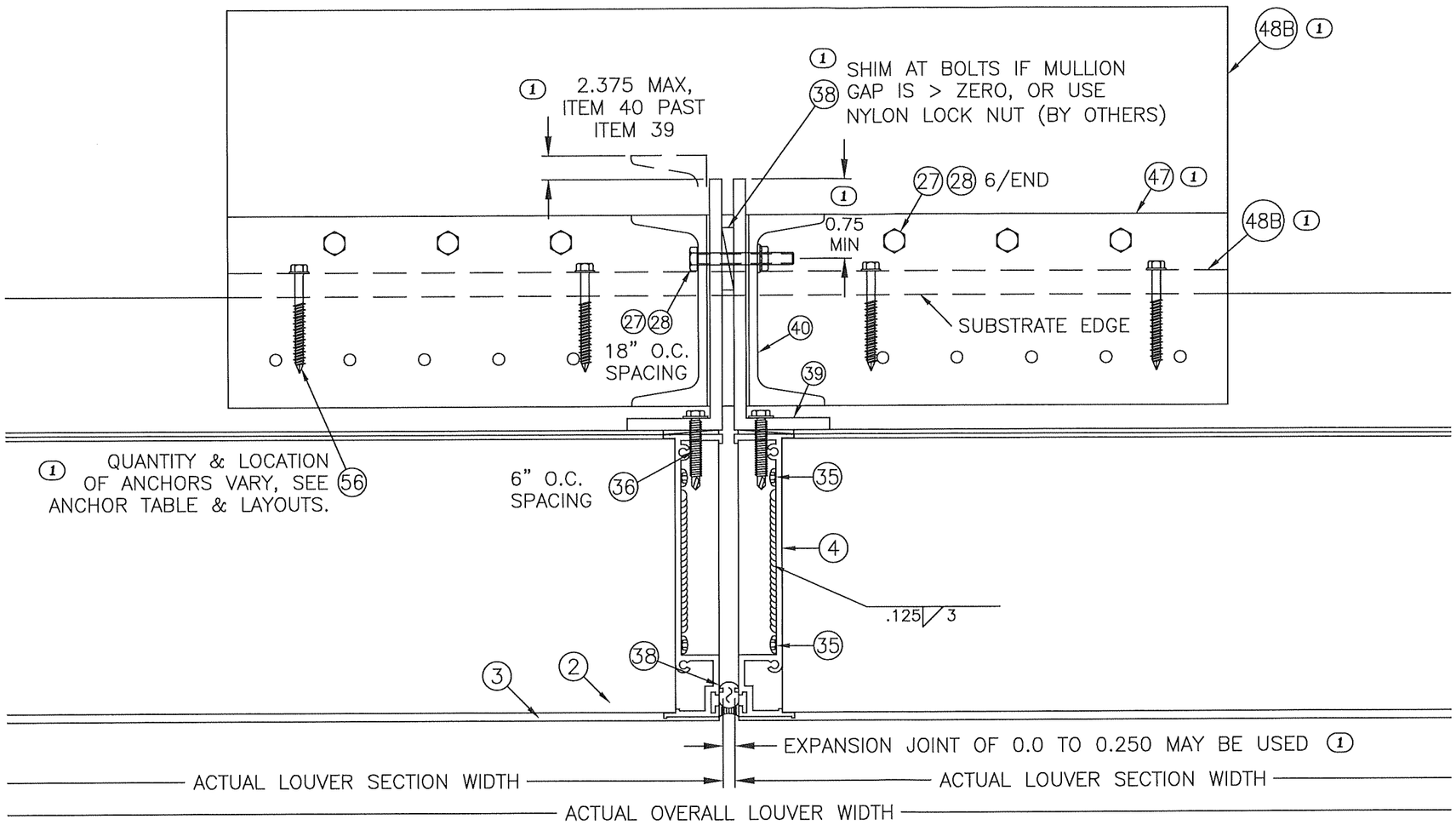

17B / 16

MULLION DETAIL, W/ MULLION ANGLE MOUNTING
LOUVER HEIGHT ≤ 96 IN.

CONTINUOUS ANGLE MOUNT

REV 01: 8/1/24, MOVED DETAIL 17B TO THIS NEW PAGE, REPLACED ITEMS 47 & 48B WITH UPDATED DESIGNS, REDEFINED ITEM 40 MAX OFFSET, ADDED 0.75 MIN OFFSET, ADDED ITEM 38 & NOTE, UPDATED ANCHOR REFERENCE NOTE, & REWORDED MULLION GAP NOTE.

PRODUCT REVISED
as complying with the Florida Building Code
NOA-No. 24-0930.04
Expiration Date 12/06/2029
By
Miami-Dade Product Control

DATE 8/9/2017
DRAWN BY MES
SCALE
SHEET NO. 16 OF 37
CAD DRAWING NO. ESD-635D

GREENHECK
P.O.BOX 410 SCHOFIELD, WISCONSIN 54476-0410

TITLE
ESD-635D LOUVER
CONTINUOUS ANGLE MOUNT
MULLION DETAILS WITH MULLION ANGLE MOUNTING, H≤96"

WAYNE K. HELMILA
LICENSE
No. 59092
STATE OF FLORIDA
PROFESSIONAL ENGINEER

SEP 27 2024

RICE
ENGINEERING
105 School Creek Trail
Luxemburg, WI 54217
Phone: (920) 617-1042
Fax: (920) 617-1100
www.rice-inc.com
Florida Firm No: F-01000005061
Certificate of Authorization: #9090
Wayne K. Helmila
Registration No: 59092

REV 01: 8/1/24, WAS PAGE 14, MOVED DETAILS 20 & 21 TO A NEW PAGE, REMOVED "TYP" FROM EDGE GAP X4, ADDED ITEM 38 X2, & ADDED AMCA 550 NOTE X2.

18/17 HEAD DETAIL W/ VCD-40
LOUVER HEIGHT ≤ 144 IN.
FLANGE FRAME SLEEVE MOUNT

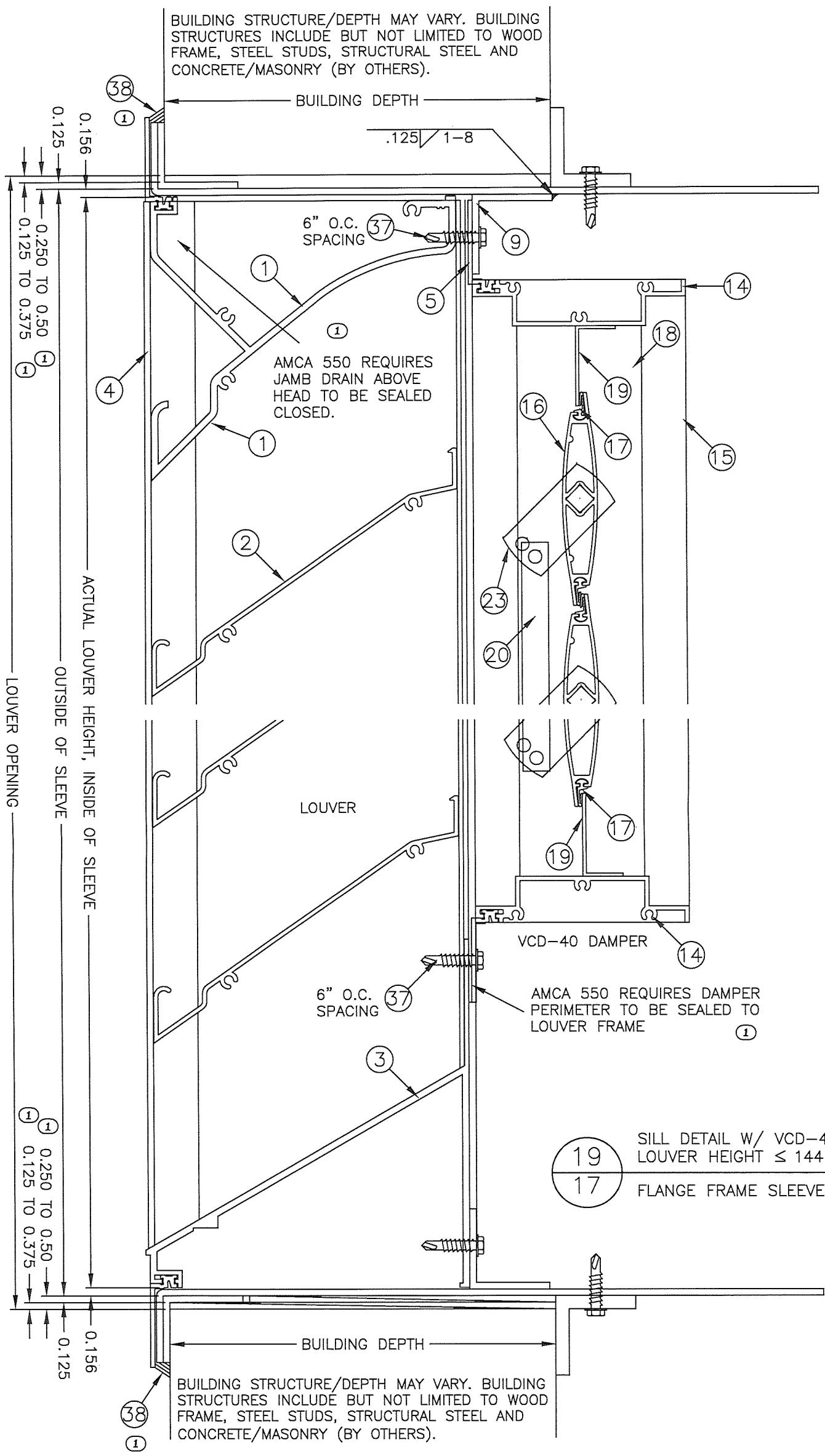

19/17 SILL DETAIL W/ VCD-40
LOUVER HEIGHT ≤ 144 IN.
FLANGE FRAME SLEEVE MOUNT

PRODUCT REVISED
as complying with the Florida Building Code
NOA-No. 24-0930.04
Expiration Date 12/06/2029
By
Miami-Dade Product Control

SEP 27 2024

RICE ENGINEERING
105 School Creek Trail
Luxemburg, WI 54217
Phone: (920) 617-1042
Fax: (920) 617-1100
www.rice-inc.com
Florida Firm No: F-01000005061
Certificate of Authorization: #9090
Wayne K. Helmila
Registration No: 59092

WAYNE K. HELMILA LICENSE No. 59092 STATE OF FLORIDA PROFESSIONAL ENGINEER

GREENHECK
P.O.BOX 410 SCHOFIELD, WISCONSIN 54476-0410

DRAWN BY MES	DATE 8/9/2017
SCALE	
SHEET NO. 17 OF 37	
CAD DRAWING NO. ESD-635D	

TITLE
ESD-635D LOUVER W/VCD-40
FLANGE FRAME SLEEVE MOUNT
HEAD & SILL DETAILS
H≤144"

REV 01: 8/1/24, MOVED DETAILS 20 & 21 TO THIS NEW PAGE, REMOVED "TYP" FROM EDGE GAP X2, ADDED ITEM 38 CALLOUT X2, & ADDED AMCA 550 NOTE X2.

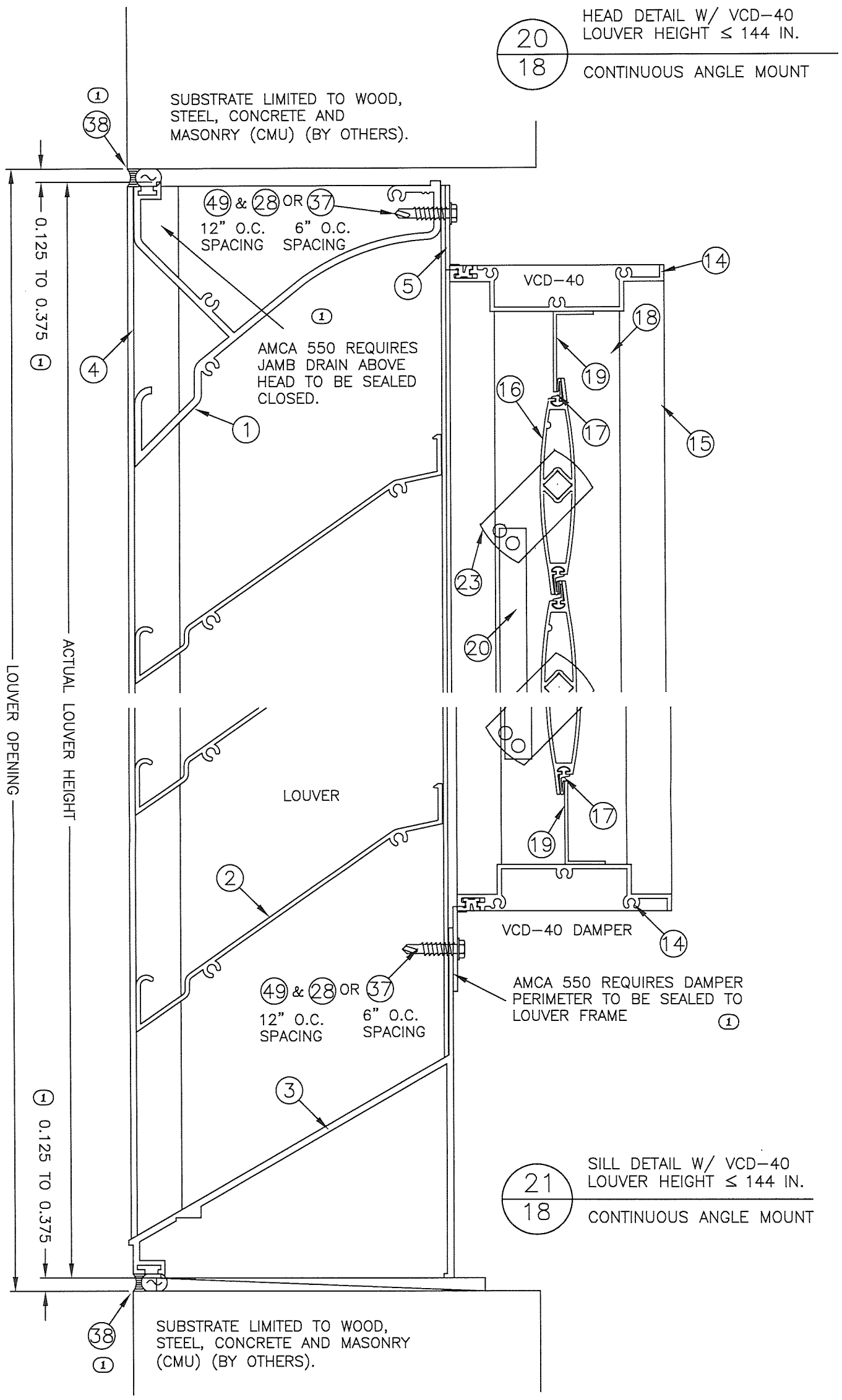

PRODUCT REVISED
as complying with the Florida Building Code
NOA-No. 24-0930.04
Expiration Date 12/06/2029
By
Miami-Dade Product Control

SEP 27 2024

WAYNE K. HELMILA
LICENSE
No. 59092
STATE OF FLORIDA
PROFESSIONAL ENGINEER

RICE
ENGINEERING
105 School Creek Trail
Luxemburg, WI 54217
Phone: (920) 617-1042
Fax: (920) 617-1100
www.rice-inc.com
Florida Firm No: F-01000005061
Certificate of Authorization: #9090
Wayne K. Helmila
Registration No: 59092

GREENHECK
P.O.BOX 410 SCHOFIELD, WISCONSIN 54476-0410

TITLE
ESD-635D LOUVER W/VCD-40
CONTINUOUS ANGLE MOUNT
HEAD & SILL DETAILS
H≤144"

DRAWN BY MES	DATE 8/9/2017
SCALE	
SHEET NO. 18 OF 37	
CAD DRAWING NO. ESD-635D	

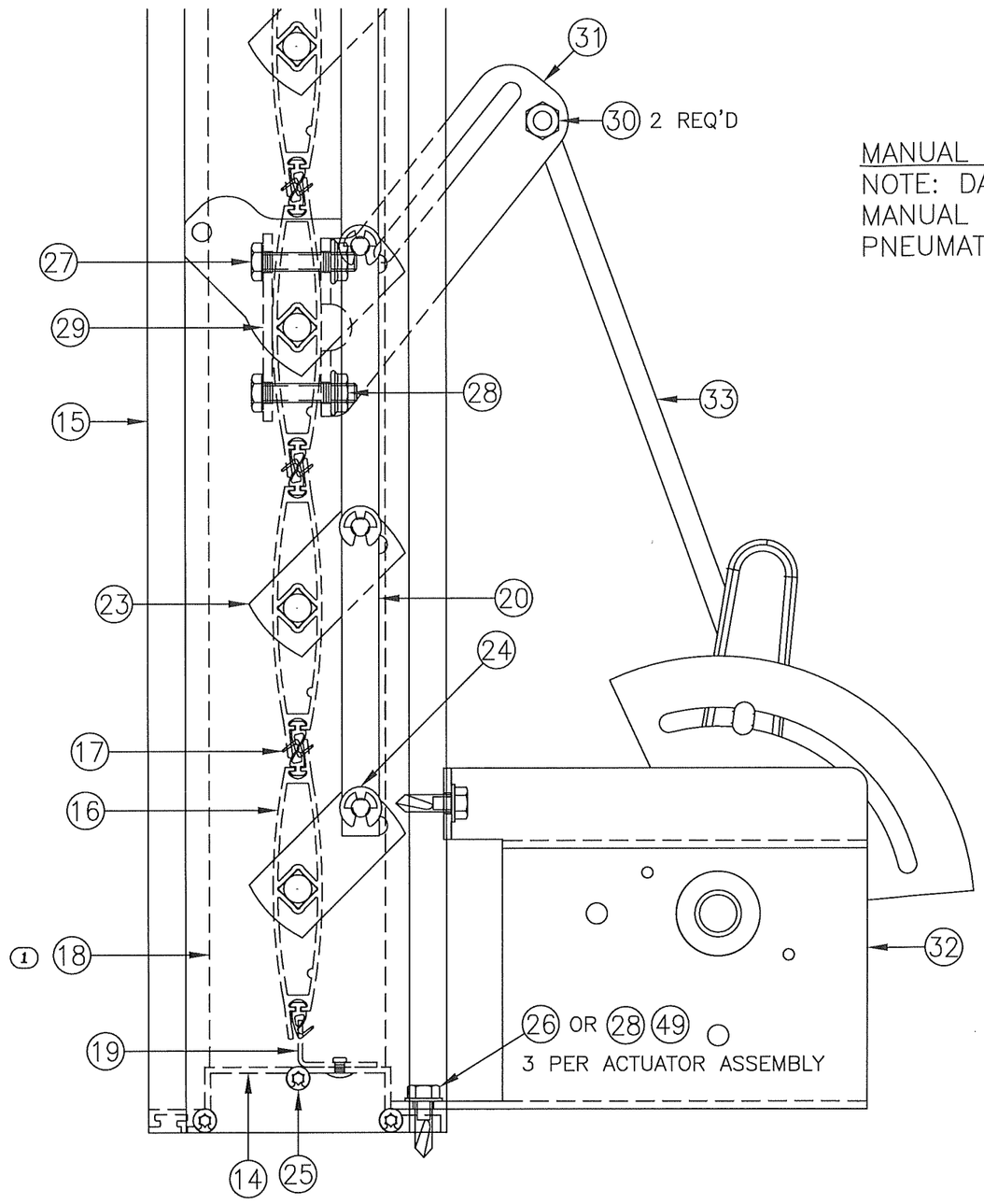

MANUAL QUADRANT ACTUATOR SHOWN
NOTE: DAMPER MAY BE OPERATED BY MANUAL QUADRANT, AN ELECTRIC OR PNEUMATIC ACTUATOR.

22/19 VCD-40 DAMPER & ACTUATOR DETAIL
LOUVER HEIGHT ≤ 144 IN.

FLANGE FRAME SLEEVE MOUNT,
& CONTINUOUS ANGLE MOUNT

PRODUCT REVISED
as complying with the Florida Building Code
NOA-No. 24-0930.04
Expiration Date 12/06/2029
By
Miami-Dade Product Control

REV 01: 8/1/24, WAS PAGE 15, & ADDED ITEM 18.

DRAWN BY MES | DATE 8/9/2017
SCALE
SHEET NO. 19 OF 37
CAD DRAWING NO. ESD-635D

GREENHECK
P.O.BOX 410 SCHOFIELD, WISCONSIN 54476-0410

TITLE VCD-40 DAMPER
FLANGE FRAME SLEEVE MOUNT
& CONTINUOUS ANGLE MOUNT
DAMPER & ACTUATOR, H≤144"

WAYNE K. HELMILA
LICENSE
No. 59092
STATE OF FLORIDA
PROFESSIONAL ENGINEER

SEP 27 2024

RICE
ENGINEERING
105 School Creek Trail
Luxemburg, WI 54217
Phone: (920) 617-1042
Fax: (920) 617-1100
www.rice-inc.com
Florida Firm No: F-01000005061
Certificate of Authorization: #9090
Wayne K. Helmila
Registration No: 59092

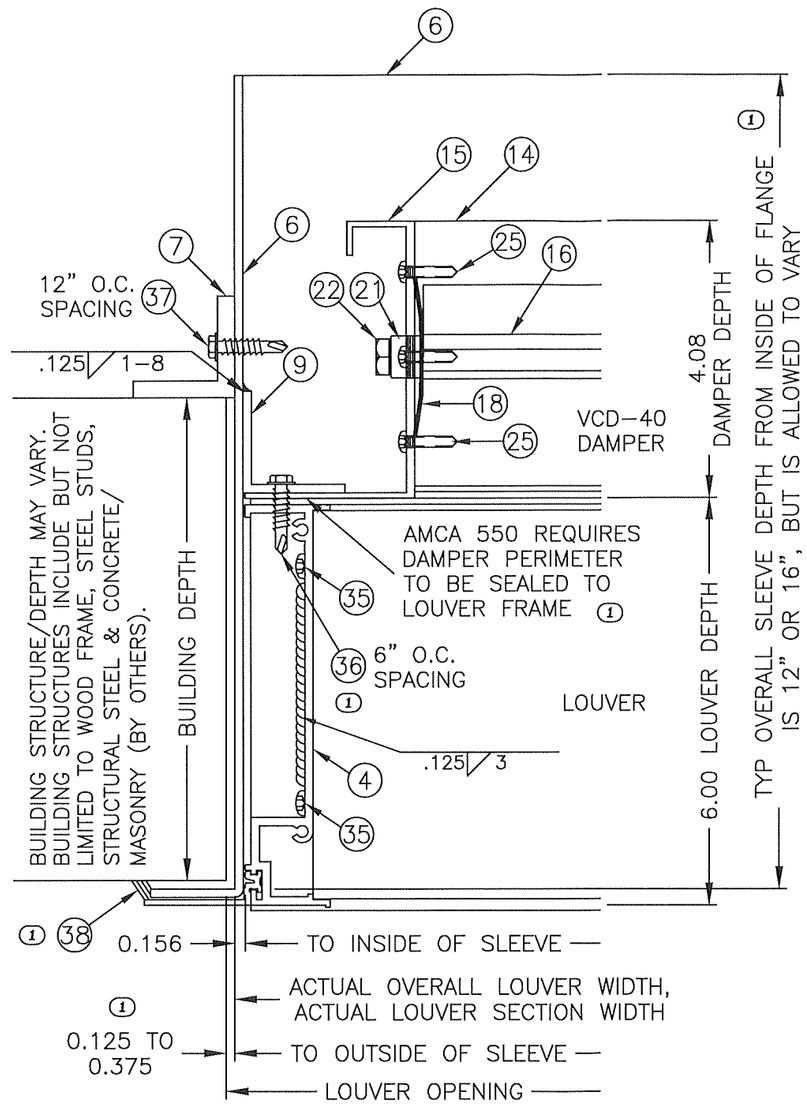

23/20 JAMB DETAIL W/ VCD-40
LOUVER HEIGHT ≤ 144 IN.
FLANGE FRAME SLEEVE MOUNT

PRODUCT REVISED
as complying with the Florida Building Code
NOA-No. 24-0930.04
Expiration Date 12/06/2029
By
Miami-Dade Product Control

REV 01: 8/1/24, WAS PAGE 16, MOVED DETAILS 24A&B TO A NEW PAGE, REPLACED ITEM 37 WITH ITEM 36, ADDED SLEEVE DEPTH DIM, ADDED ITEM 38, REMOVED "TYP" FROM EDGE GAP, & ADDED AMCA 550 NOTE.

DRAWN BY MES	DATE 8/9/2017
SCALE	
SHEET NO. 20 OF 37	
CAD DRAWING NO. ESD-635D	

GREENHECK
P.O.BOX 410 SCHOFIELD, WISCONSIN 54476-0410

TITLE ESD-635D LOUVER W/VCD-40
FLANGE FRAME SLEEVE MOUNT
JAMB DETAILS
H≤144"

WAYNE K. HELMILA
LICENSE
No. 59092
STATE OF FLORIDA
PROFESSIONAL ENGINEER

SEP 27 2024

RICE
ENGINEERING
105 School Creek Trail
Luxemburg, WI 54217
Phone: (920) 617-1042
Fax: (920) 617-1100
www.rice-inc.com
Florida Firm No: F-01000005061
Certificate of Authorization: #9090
Wayne K. Helmila
Registration No: 59092

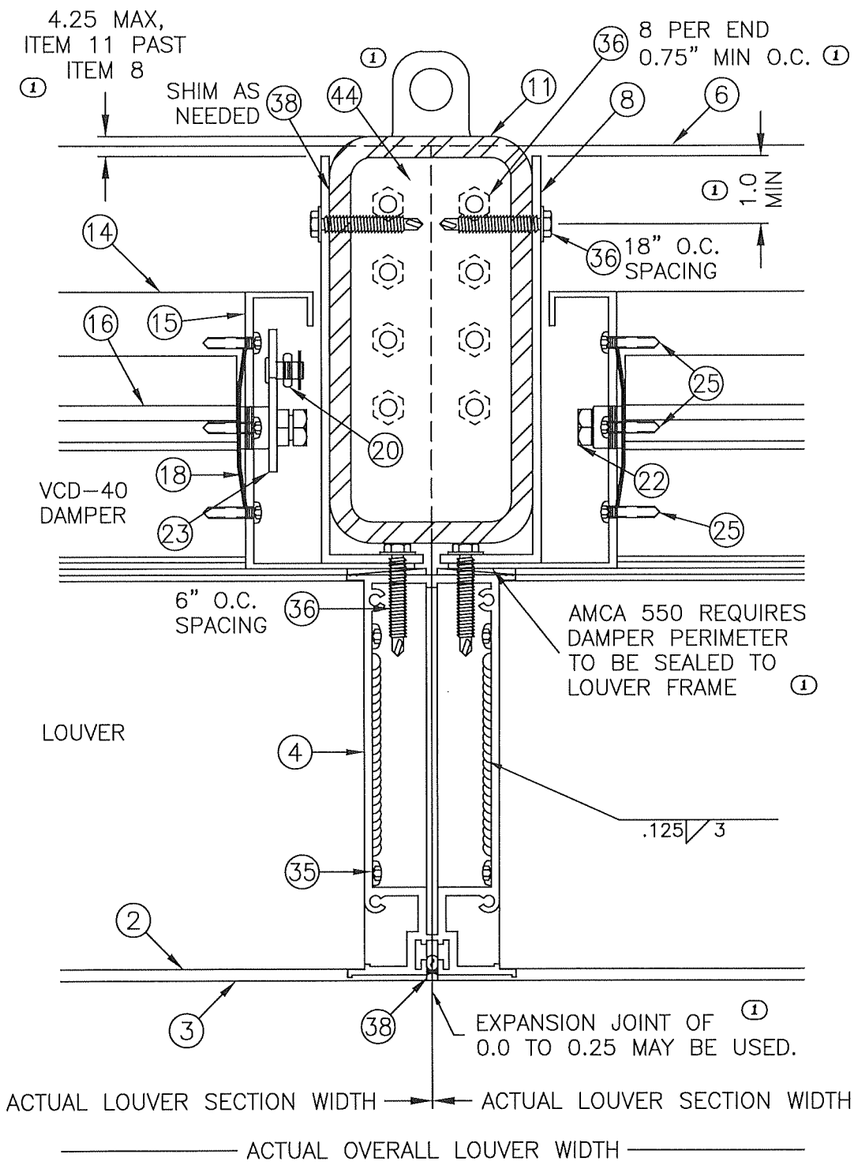

24A / 21 — MULLION DETAIL W/ VCD-40
LOUVER HEIGHT ≤ 144 IN.
FLANGE FRAME SLEEVE MOUNT

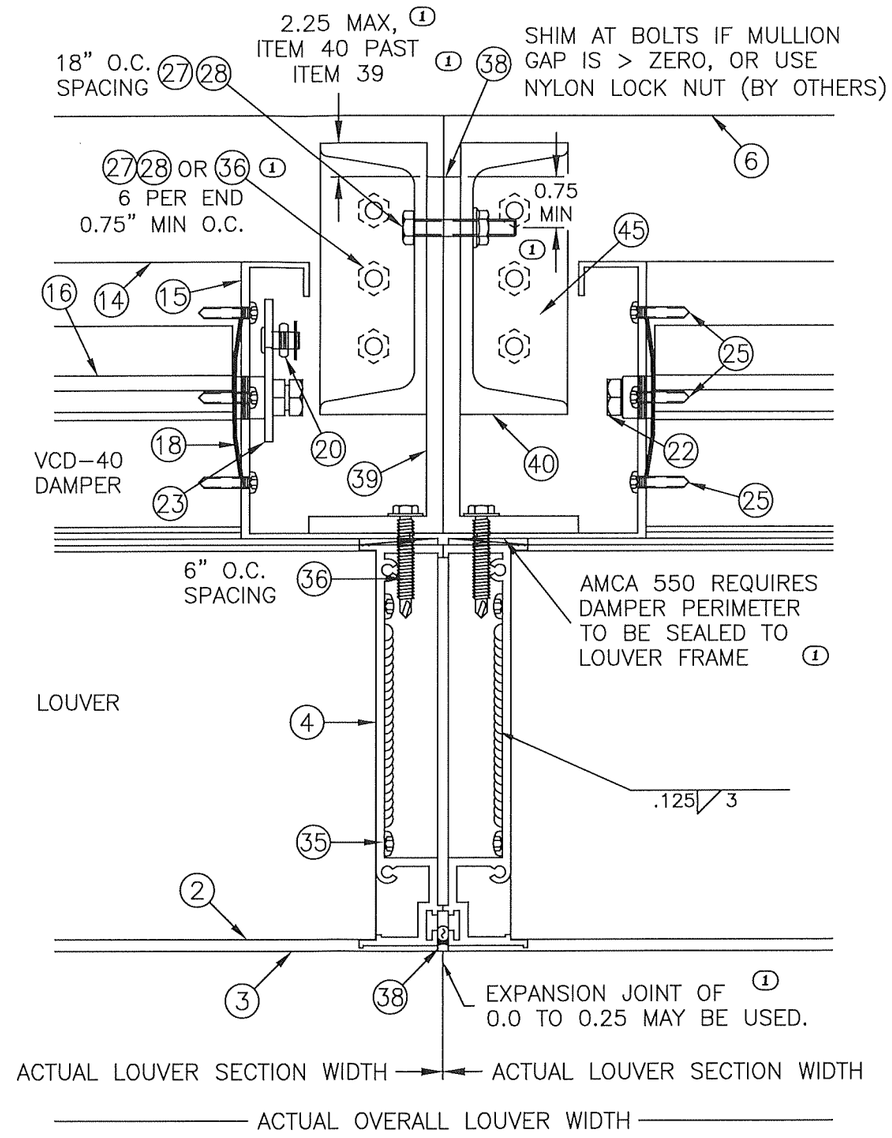

24B / 21 — MULLION DETAIL W/ VCD-40
LOUVER HEIGHT ≤ 96 IN.
FLANGE FRAME SLEEVE MOUNT

REV 01: 8/1/24, MOVED ITEMS 24A&B TO THIS NEW PAGE, REDEFINED ITEM 11 & 40 OFFSETS, ADDED 1.0 & 0.75 MIN OFFSETS, ADDED LUG TO ITEM 11, ADDED ITEM 38 CALLOUT & NOTE, ADDED MIN O.C. FOR ITEM 36, ADDED ITEM 27/28 CALLOUT WITH ITEM 36 OPTION, REWORDED MULLION GAP NOTE X2, & ADDED AMCA 550 NOTE X2.

DRAWN BY MES | DATE 8/9/2017
SCALE
SHEET NO. 21 OF 37
CAD DRAWING NO. ESD-635D

GREENHECK
P.O.BOX 410 SCHOFIELD, WISCONSIN 54476-0410

TITLE ESD-635D LOUVER W/VCD-40
FLANGE FRAME SLEEVE MOUNT
MULLION DETAIL
H≤144" & H≤96"

WAYNE K. HELMILA
LICENSE
No. 59092
STATE OF FLORIDA
PROFESSIONAL ENGINEER

SEP 27 2024

RICE
ENGINEERING
105 School Creek Trail
Luxemburg, WI 54217
Phone: (920) 617-1042
Fax: (920) 617-1100
www.rice-inc.com
Florida Firm No: F-01000005061
Certificate of Authorization: #9090
Wayne K. Helmila
Registration No: 59092

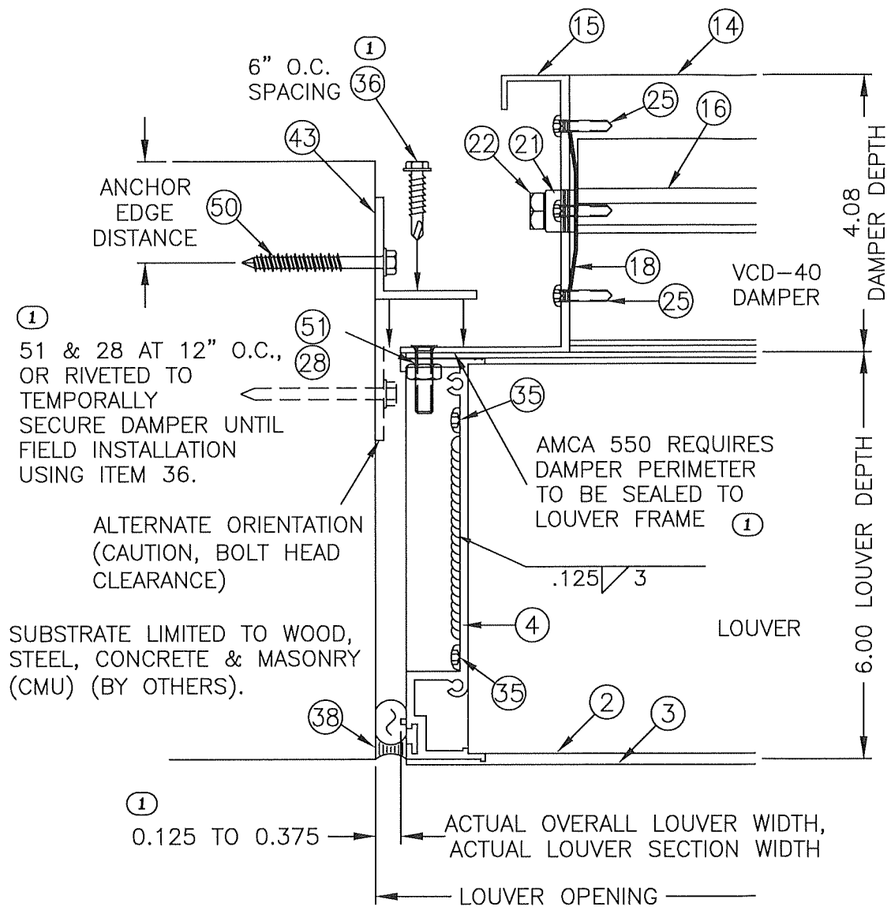

25/22 JAMB DETAIL W/ VCD-40
LOUVER HEIGHT ≤ 144 IN.
CONTINUOUS ANGLE MOUNT

PRODUCT REVISED
as complying with the Florida Building Code
NOA-No. 24-0930.04
Expiration Date 12/06/2029
By
Miami-Dade Product Control

REV 01: 8/1/24, WAS PAGE 17, MOVED DETAILS 26A&B TO A NEW PAGE, UPDATED ON CENTER, REPLACED ITEM 37 WITH ITEM 36, ADDED DAMPER RIVET ATTACHMENT NOTE, REMOVED "TYP" FROM EDGE GAP, & ADDED AMCA 550 NOTE.

DRAWN BY MES | DATE 8/9/2017
SCALE
SHEET NO. 22 OF 37
CAD DRAWING NO. ESD-635D

GREENHECK
P.O.BOX 410 SCHOFIELD, WISCONSIN 54476-0410

TITLE ESD-635D LOUVER W/VCD-40
CONTINUOUS ANGLE MOUNT
JAMB DETAILS
H≤144"

WAYNE K. HELMILA
LICENSE
No. 59092
STATE OF FLORIDA
PROFESSIONAL ENGINEER

SEP 27 2024

RICE
ENGINEERING
105 School Creek Trail
Luxemburg, WI 54217
Phone: (920) 617-1042
Fax: (920) 617-1100
www.rice-inc.com
Florida Firm No: F-01000005061
Certificate of Authorization: #9090
Wayne K. Helmila
Registration No: 59092

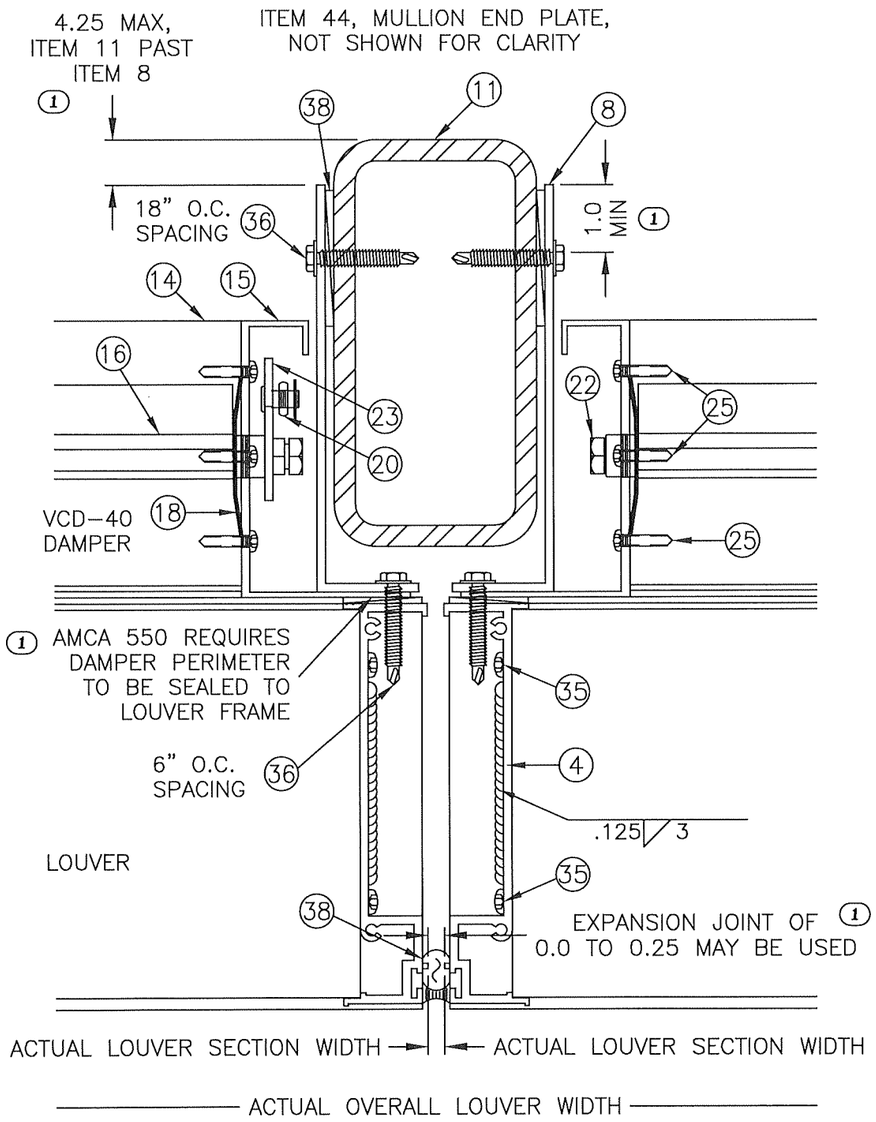

26A / 23 — MULLION DETAIL W/ VCD-40
LOUVER HEIGHT ≤ 144 IN.
CONTINUOUS ANGLE MOUNT

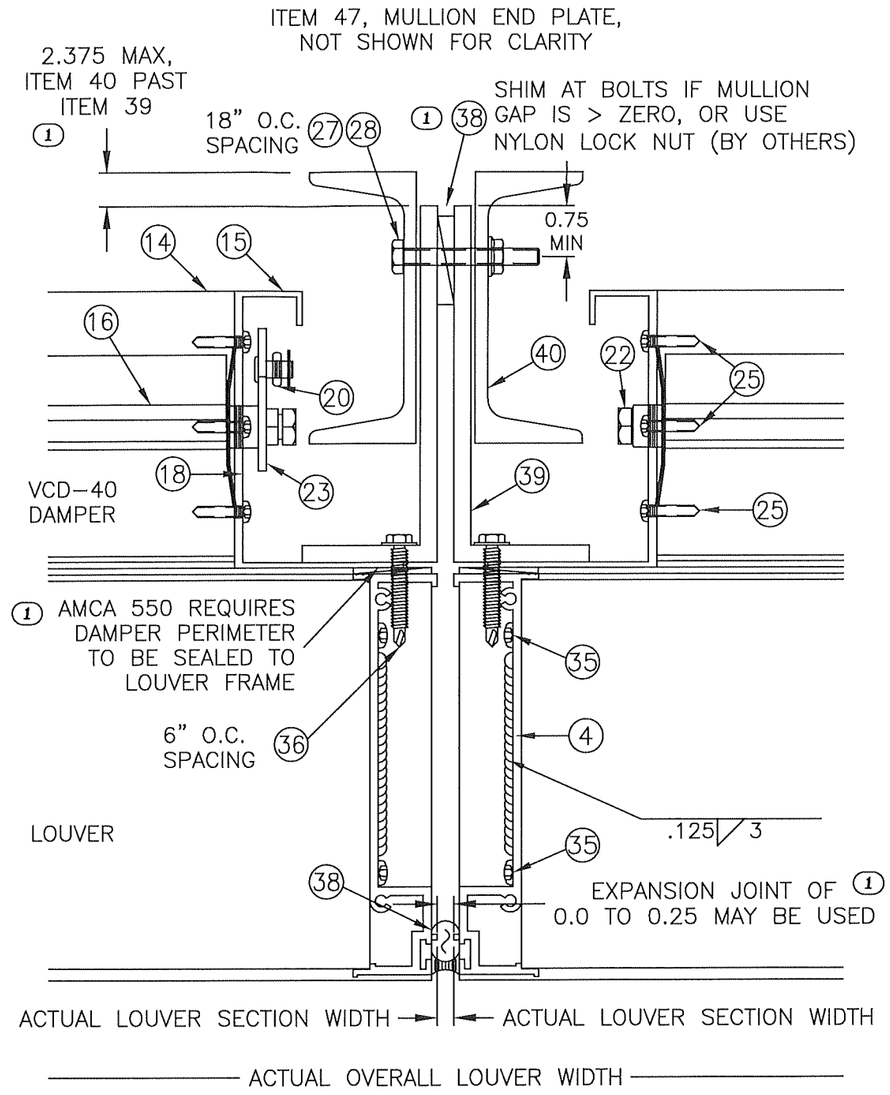

26B / 23 — MULLION DETAIL W/ VCD-40
LOUVER HEIGHT ≤ 96 IN.
CONTINUOUS ANGLE MOUNT

REV 01: 8/1/24, MOVED DETAIL 26A&B TO THIS NEW PAGE, REDEFINED ITEM 11 & 40 MAX OFFSETS, ADDED 1.0 & 0.75 MIN OFFSETS, REWORDED MULLION GAP NOTE X2, ADDED ITEM 38 & NOTE, & ADDED AMCA 550 NOTE X2.

PRODUCT REVISED
as complying with the Florida Building Code
NOA-No. 24-0930.04
Expiration Date 12/06/2029
By
Miami-Dade Product Control

DRAWN BY MES	DATE 8/9/2017
SCALE	SHEET NO. 23 OF 37
CAD DRAWING NO. ESD-635D	

GREENHECK
P.O.BOX 410 SCHOFIELD, WISCONSIN 54476-0410

TITLE ESD-635D LOUVER W/VCD-40
CONTINUOUS ANGLE MOUNT
MULLION DETAILS
H≤144" & H≤96"

WAYNE K. HELMILA
LICENSE
No. 59092
STATE OF FLORIDA
PROFESSIONAL ENGINEER

SEP 27 2024

RICE
ENGINEERING
105 School Creek Trail
Luxemburg, WI 54217
Phone: (920) 617-1042
Fax: (920) 617-1100
www.rice-inc.com
Florida Firm No: F-01000005061
Certificate of Authorization: #9090
Wayne K. Helmila
Registration No: 59092

NOTES:

1. OTHER SHAPES MAY APPLY PROVIDING THEY ARE SIMILAR TO THOSE SHOWN AND HAVE CORNER CONSTRUCTION AS DESCRIBED ON ALL SHEETS.

2. ALL SHAPED LOUVER SECTIONS ARE RESTRICTED TO THE SAME SECTION WIDTH AND PRESSURE AS THE RECTANGULAR LOUVER SECTIONS AND MAY BE STACKED VERTICALLY AND HORIZONTALLY THE SAME AS THE RECTANGULAR SECTIONS.

3. BLADE SUPPORT ANGLE AND BRACKETS ARE REQUIRED WHEN SECTION WIDTH EXCEEDS 36".

4. ALL SLOPED AND CURVED JAMBS OF SHAPED SECTIONS REQUIRE ATTACHMENT TO THE SUBSTRATE IN THE SAME MANNER AS VERTICAL JAMBS AS SPECIFIED IN THESE DRAWINGS. A FRAME MEMBER IS CONSIDERED A JAMB IF A BLADE TERMINATES INTO THE FRAME MEMBER. (1)

5. VCD-40 DAMPER ONLY ALLOWED ON SQUARE AND RECTANGULAR SHAPES. (1)

EXAMPLE SHAPES, OTHERS AVAILABLE (1)

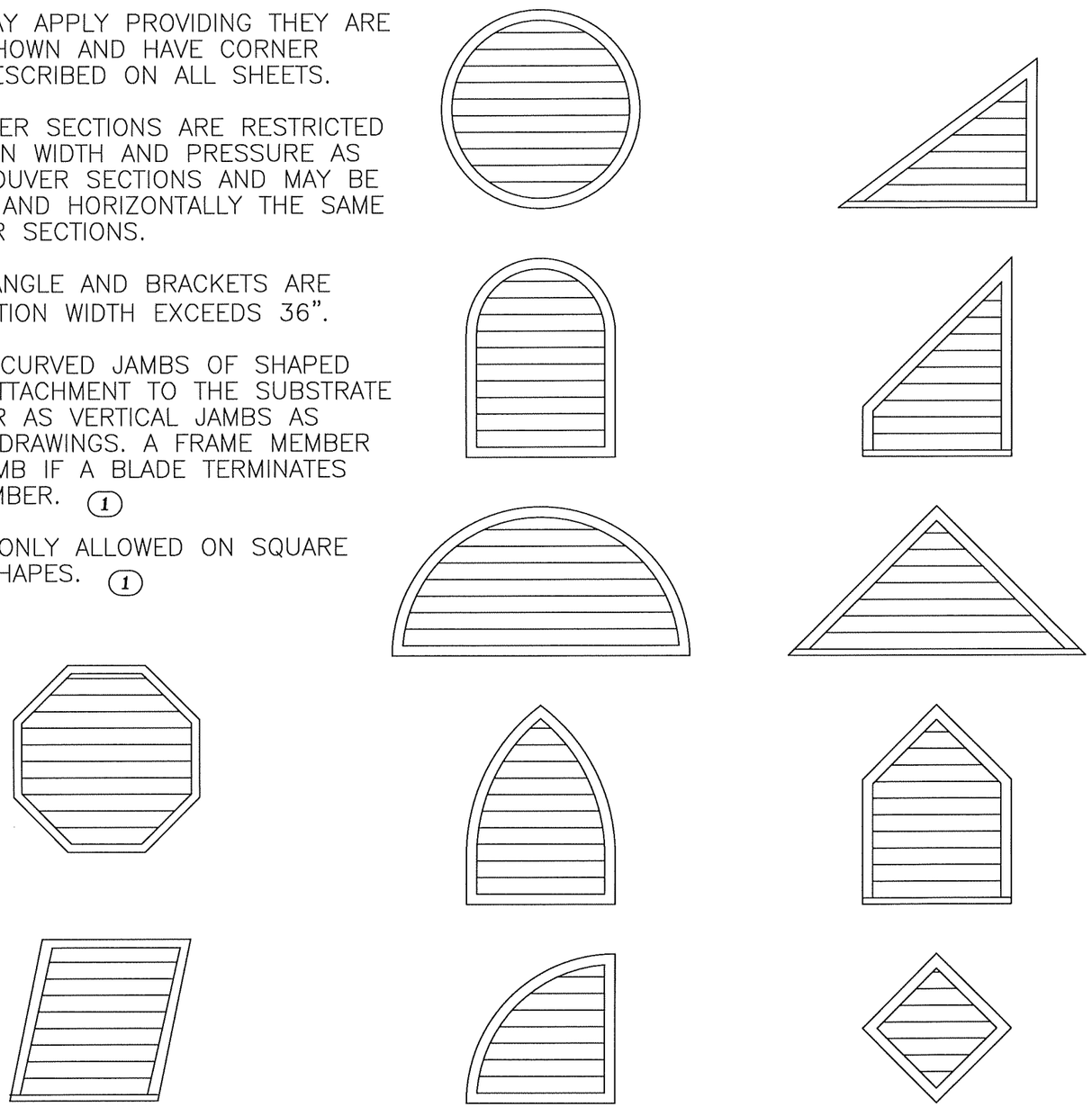

REV 01: 8/1/24, WAS PAGE 18, UPDATED TITLE, & ADDED NOTES 4 & 5.

PRODUCT REVISED
as complying with the Florida Building Code
NOA-No. 24-0930.04
Expiration Date 12/06/2029
By
Miami-Dade Product Control

DRAWN BY MES
DATE 8/9/2017
SCALE
SHEET NO. 24 OF 37
CAD DRAWING NO. ESD-635D

GREENHECK
P.O.BOX 410 SCHOFIELD, WISCONSIN 54476-0410

TITLE ESD-635D LOUVER
FLANGE FRAME SLEEVE MOUNT
& CONTINUOUS ANGLE MOUNT
AVAILABLE SHAPES, H≤144"

WAYNE K. HELMILA
LICENSE
No. 59092
STATE OF FLORIDA
PROFESSIONAL ENGINEER

SEP 27 2024

RICE
ENGINEERING
105 School Creek Trail
Luxemburg, WI 54217
Phone: (920) 617-1042
Fax: (920) 617-1100
www.rice-inc.com
Florida Firm No: F-01000005061
Certificate of Authorization: #9090
Wayne K. Helmila
Registration No: 59092

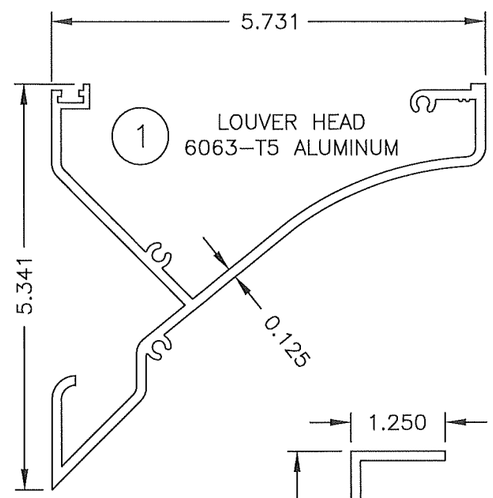

1 LOUVER HEAD
6063–T5 ALUMINUM

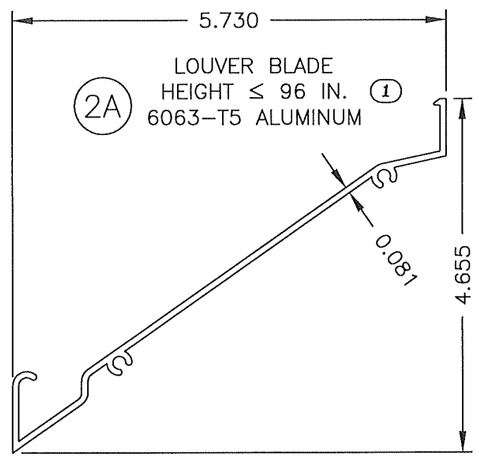

2A LOUVER BLADE
HEIGHT ≤ 96 IN. (1)
6063–T5 ALUMINUM

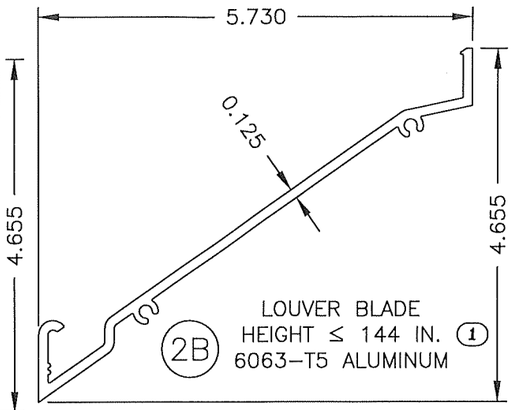

2B LOUVER BLADE
HEIGHT ≤ 144 IN. (1)
6063–T5 ALUMINUM

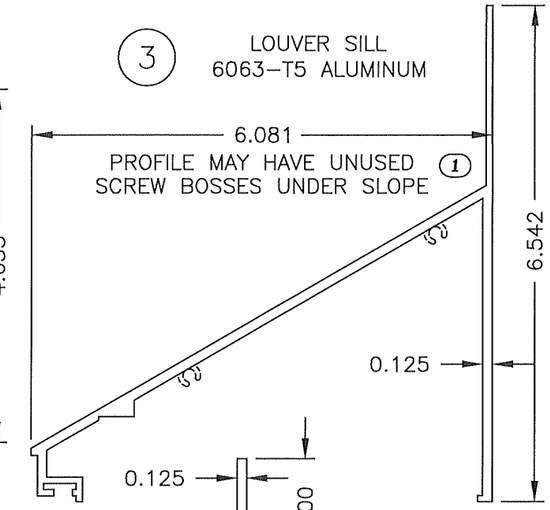

3 LOUVER SILL
6063–T5 ALUMINUM

PROFILE MAY HAVE UNUSED SCREW BOSSES UNDER SLOPE (1)

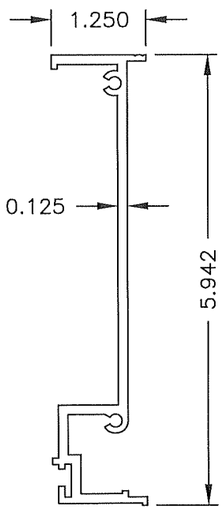

4A LOUVER JAMB
6063–T5 ALUMINUM

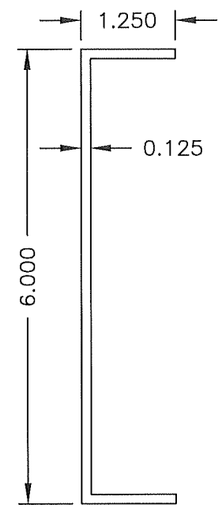

4B OPTIONAL JAMB
6063–T5 ALUMINUM

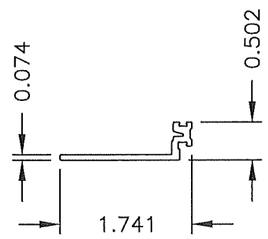

5 LOUVER/DAMPER FLANGE
6063–T5 ALUMINUM

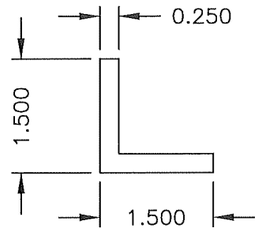

7 LOUVER BLADE SUPPORT &
SLEEVE MOUNTING ANGLE
6063–T5 ALUMINUM

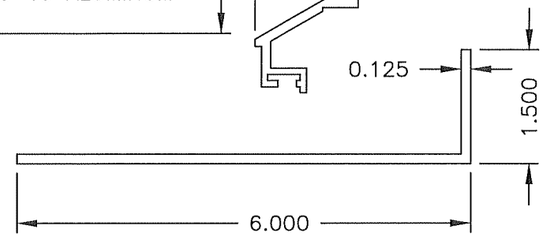

8 LOUVER JAMB
MULLION ANGLE
6005–T5 ALUMINUM (1)

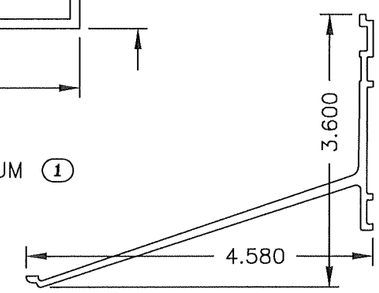

13 BLADE SUPPORT BRACKET
6063–T5 ALUMINUM

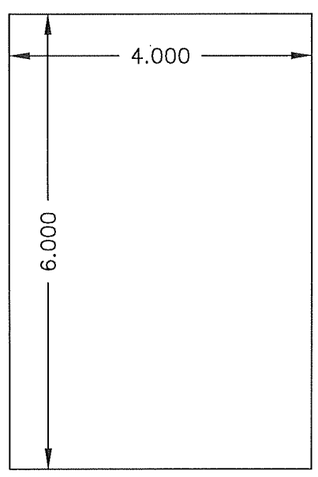

12 BLADE SUPPORT SHIM
5052–H32 ALUMINUM

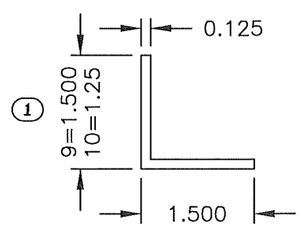

9 LOUVER SLEEVE
ATTACHMENT ANGLE
6063–T5 ALUMINUM

10 LOUVER SLEEVE FLANGE
SUPPORT ANGLE
6063–T5 ALUMINUM

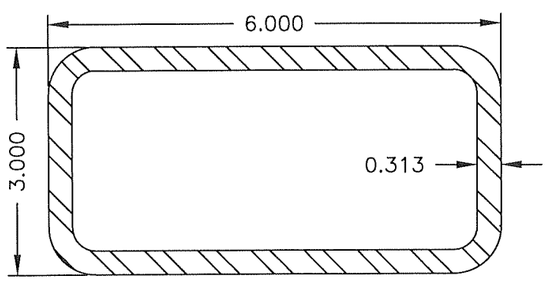

11 MULLION TUBE
A36 STEEL

PRODUCT REVISED
as complying with the Florida Building Code
NOA-No. 24-0930.04
Expiration Date 12/06/2029
By
Miami-Dade Product Control

REV 01: 8/1/24, WAS PAGE 20, ADDED HEIGHTS FOR ITEMS 2A & 2B, ADDED NOTE AND BOSSES TO ITEM 3, UPDATED ALLOY OF ITEM 8, & CORRECTED LENGTH OF ITEM 10.

DRAWN BY MES | DATE 8/9/2017
SCALE
SHEET NO. 25 OF 37
CAD DRAWING NO. ESD-635D

GREENHECK
P.O.BOX 410 SCHOFIELD, WISCONSIN 54476-0410

TITLE ESD-635D LOUVER
FLANGE FRAME SLEEVE MOUNT
& CONTINUOUS ANGLE MOUNT
PART PROFILES

WAYNE K. HELMILA
LICENSE
No. 59092
STATE OF FLORIDA
PROFESSIONAL ENGINEER

SEP 27 2024

RICE
ENGINEERING
105 School Creek Trail
Luxemburg, WI 54217
Phone: (920) 617-1042
Fax: (920) 617-1100
www.rice-inc.com
Florida Firm No: F-01000005061
Certificate of Authorization: #9090
Wayne K. Helmila
Registration No: 59092

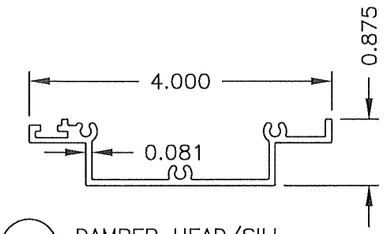

(14) DAMPER HEAD/SILL
6063–T5 ALUMINUM

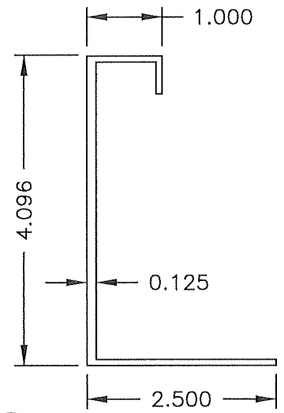

(15) DAMPER JAMB
6063–T5 ALUMINUM

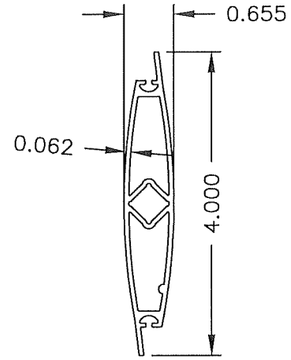

(16) DAMPER BLADE
6063–T5 ALUMINUM

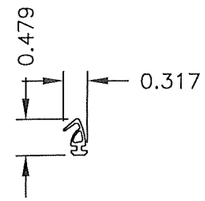

(17) DAMPER BLADE SEAL
MATERIAL VARIES

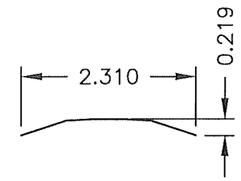

(18) DAMPER JAMB SEAL
0.007 SS

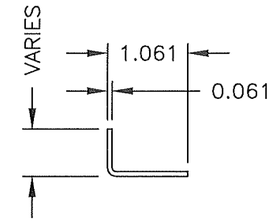

(19) DAMPER TOP/BOTTOM
CLOSURE
ALUMINUM

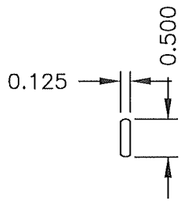

(20) DAMPER LINKAGE BAR
MATERIAL VARIES

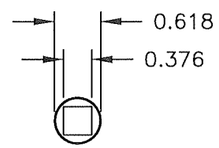

(21) DAMPER AXLE BUSHING 0.445 LONG
MATERIAL VARIES

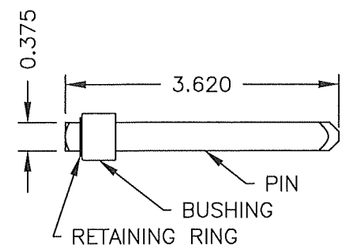

(22) NON–DRIVE DAMPER AXLE ASSEMBLY
MATERIAL VARIES

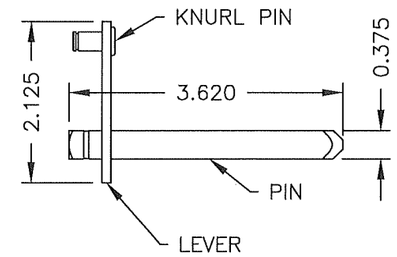

(23) DRIVE–SIDE DAMPER AXLE ASSEMBLY
MATERIAL VARIES

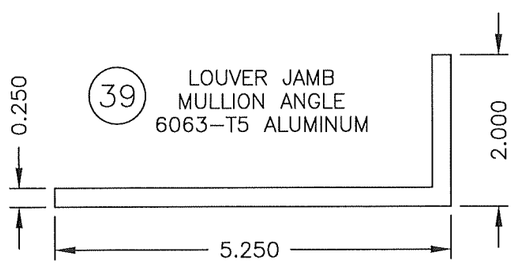

(39) LOUVER JAMB
MULLION ANGLE
6063–T5 ALUMINUM

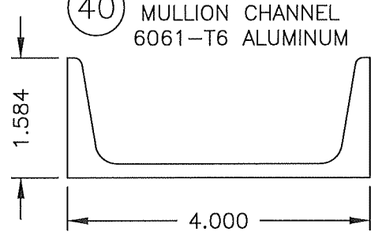

(40) LOUVER JAMB
MULLION CHANNEL
6061–T6 ALUMINUM

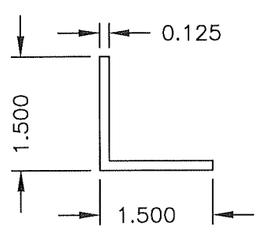

(42) LOUVER JAMB
ATTACHMENT ANGLE
6063–T5 ALUMINUM

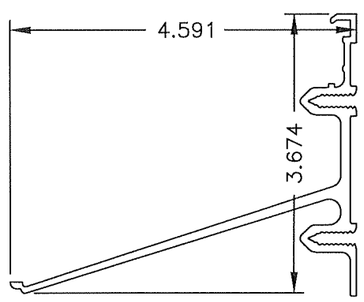

(43) BLADE SUPPORT BRACKET, ALTERNATE
6063–T5 ALUMINUM

(41) MULLION SLEEVE BRACKET
SLEEVE MOUNT
5052–H32 ALUMINUM

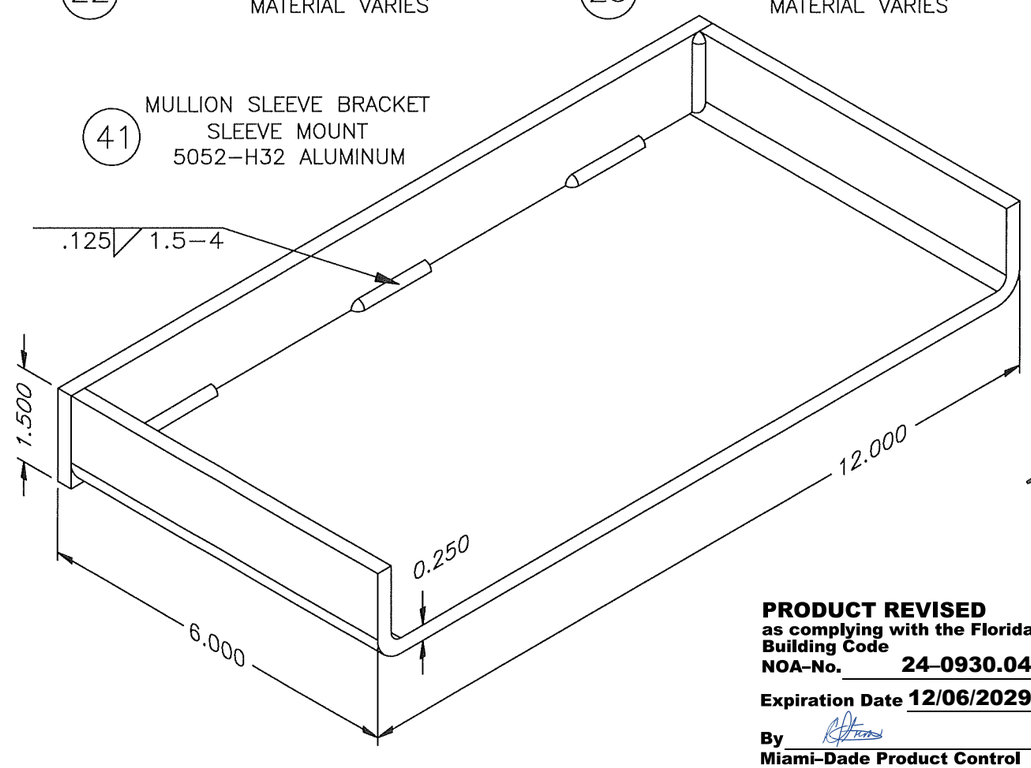

PRODUCT REVISED
as complying with the Florida Building Code
NOA-No. 24–0930.04
Expiration Date 12/06/2029
By
Miami–Dade Product Control

REV 01: 8/1/24, WAS PAGE 21.

DATE 8/9/2017
DRAWN BY MES
SCALE
SHEET NO. 26 OF 37
CAD DRAWING NO. ESD–635D

GREENHECK
P.O.BOX 410 SCHOFIELD, WISCONSIN 54476-0410

TITLE ESD–635D LOUVER
FLANGE FRAME SLEEVE MOUNT
& CONTINUOUS ANGLE MOUNT
PART PROFILES

WAYNE K. HELMILA
LICENSE
No. 59092
STATE OF FLORIDA
PROFESSIONAL ENGINEER

SEP 27 2024

RICE
ENGINEERING
105 School Creek Trail
Luxemburg, WI 54217
Phone: (920) 617-1042
Fax: (920) 617-1100
www.rice-inc.com
Florida Firm No: F-01000005061
Certificate of Authorization: #9090
Wayne K. Helmila
Registration No: 59092

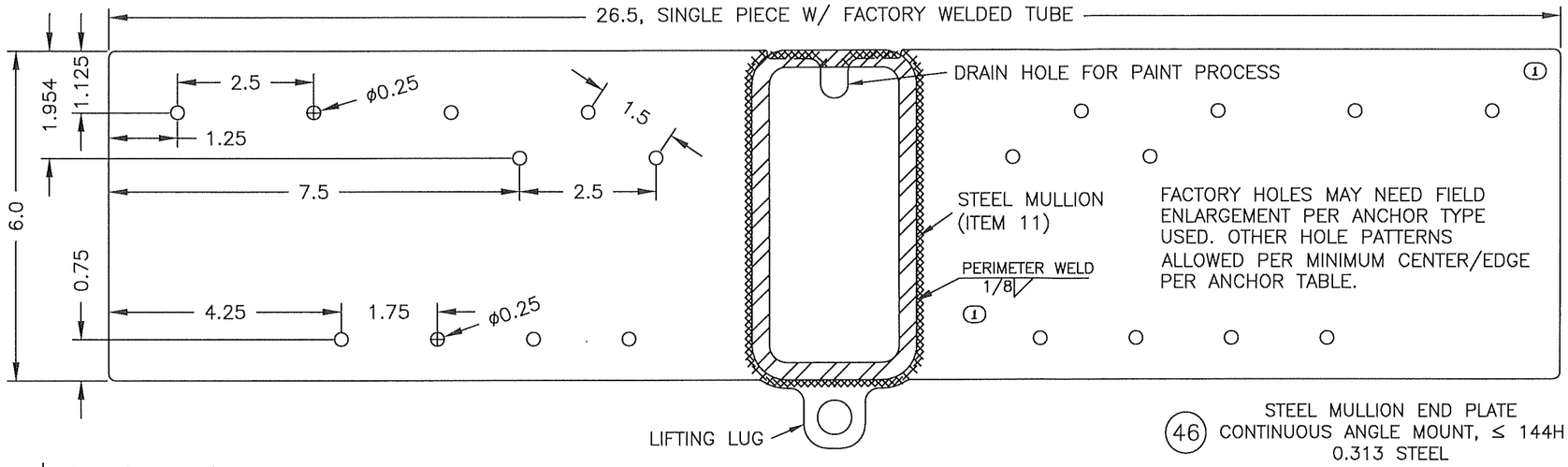

(46) STEEL MULLION END PLATE
CONTINUOUS ANGLE MOUNT, ≤ 144H
0.313 STEEL

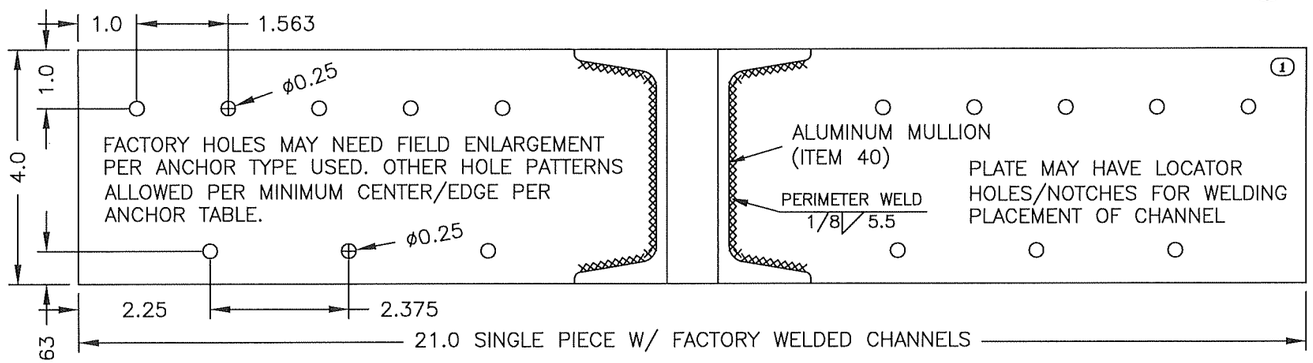

(47) ALUMINUM MULLION END PLATE
CONTINUOUS ANGLE MOUNT, ≤ 96H
5052–H32, 0.25 ALUMINUM

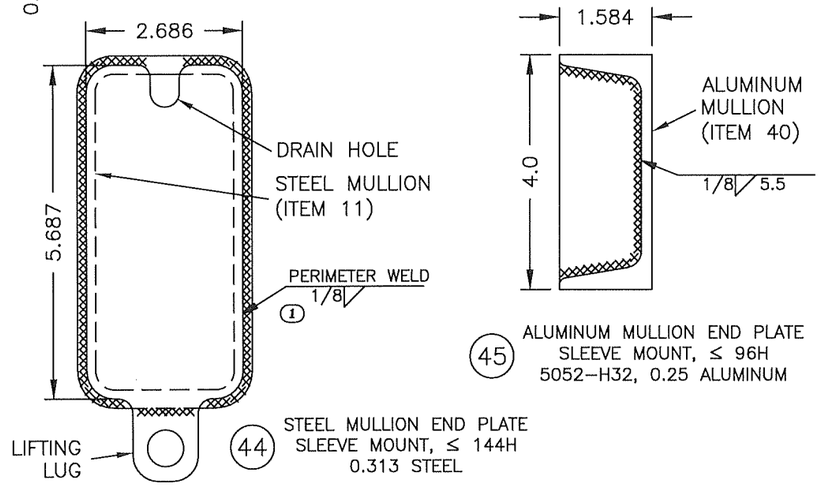

(44) STEEL MULLION END PLATE
SLEEVE MOUNT, ≤ 144H
0.313 STEEL

(45) ALUMINUM MULLION END PLATE
SLEEVE MOUNT, ≤ 96H
5052–H32, 0.25 ALUMINUM

REV 01: 8/1/24, WAS PAGE 22, CORRECTED WELD SIZE OF ITEMS 44 & 46, UPDATED PROFILE & HOLE LAYOUTS OF ITEMS 46 & 47, MOVED ITEM 48 TO NEW PAGES, & REMOVED STEEL ANGLE OPTIONS.

PRODUCT REVISED
as complying with the Florida Building Code
NOA-No. 24-0930.04
Expiration Date 12/06/2029
By
Miami-Dade Product Control

DRAWN BY MES
DATE 8/9/2017
SCALE
SHEET NO. 27 OF 37
CAD DRAWING NO. ESD-635D

GREENHECK
P.O.BOX 410 SCHOFIELD, WISCONSIN 54476-0410

TITLE ESD-635D LOUVER
FLANGE FRAME SLEEVE MOUNT
& CONTINUOUS ANGLE MOUNT
PART PROFILES

WAYNE K. HELMILA
LICENSE
No. 59092
STATE OF FLORIDA
PROFESSIONAL ENGINEER

SEP 27 2024

RICE
ENGINEERING
105 School Creek Trail
Luxemburg, WI 54217
Phone: (920) 617-1042
Fax: (920) 617-1100
www.rice-inc.com
Florida Firm No: F-01000005061
Certificate of Authorization: #9090
Wayne K. Helmila
Registration No: 59092

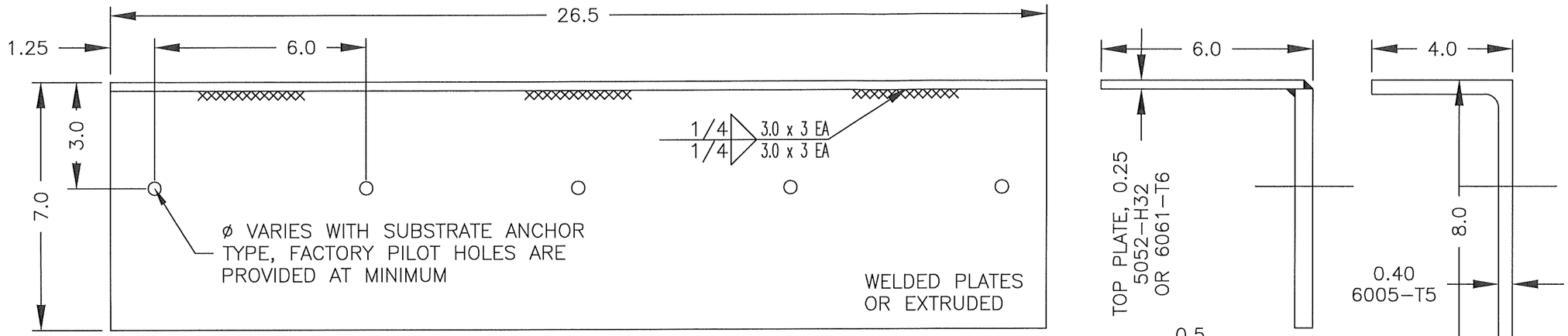

① 48A1

MULLION MOUNTING ANGLE FOR CONCRETE
CONTINUOUS ANGLE MOUNT, ≤ 144H
5052-H32/6005-T5/6061-T6, 0.25/0.40/0.5 ALUMINUM

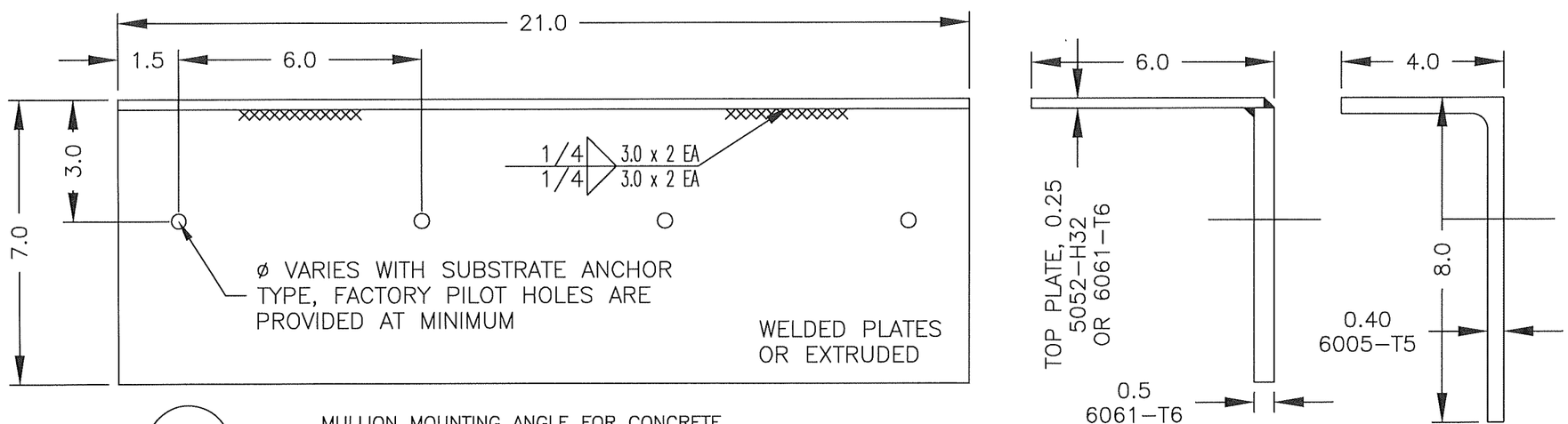

① 48B1

MULLION MOUNTING ANGLE FOR CONCRETE
CONTINUOUS ANGLE MOUNT, ≤ 96H
5052-H32/6005-T5/6061-T6, 0.25/0.40/0.5 ALUMINUM

PRODUCT REVISED
as complying with the Florida Building Code
NOA-No. 24-0930.04
Expiration Date 12/06/2029
By
Miami-Dade Product Control

REV 01: 8/1/24, MOVED ITEM 48 TO THIS NEW PAGE & SPLIT IT INTO SIX ITEMS WITH 48A1/B1 ON THIS PAGE & ITEMS 48A2/B2 & 48A3/B3 ON ANOTHER NEW PAGE, UPDATED HOLE PATTERNS & LENGTH OF ITEMS 48A1/B1.

DATE 8/9/2017
DRAWN BY MES
SCALE
SHEET NO. 28 OF 37
CAD DRAWING NO. ESD-635D

GREENHECK
P.O.BOX 410 SCHOFIELD, WISCONSIN 54476-0410

TITLE
ESD-635D LOUVER
CONTINUOUS ANGLE MOUNT
MULLION ANGLE, CONCRETE
PART PROFILES

WAYNE K. HELMILA
LICENSE
No. 59092
STATE OF FLORIDA
PROFESSIONAL ENGINEER

SEP 27 2024

RICE
ENGINEERING
105 School Creek Trail
Luxemburg, WI 54217
Phone: (920) 617-1042
Fax: (920) 617-1100
www.rice-inc.com
Florida Firm No: F-01000005061
Certificate of Authorization: #9090
Wayne K. Helmila
Registration No: 59092

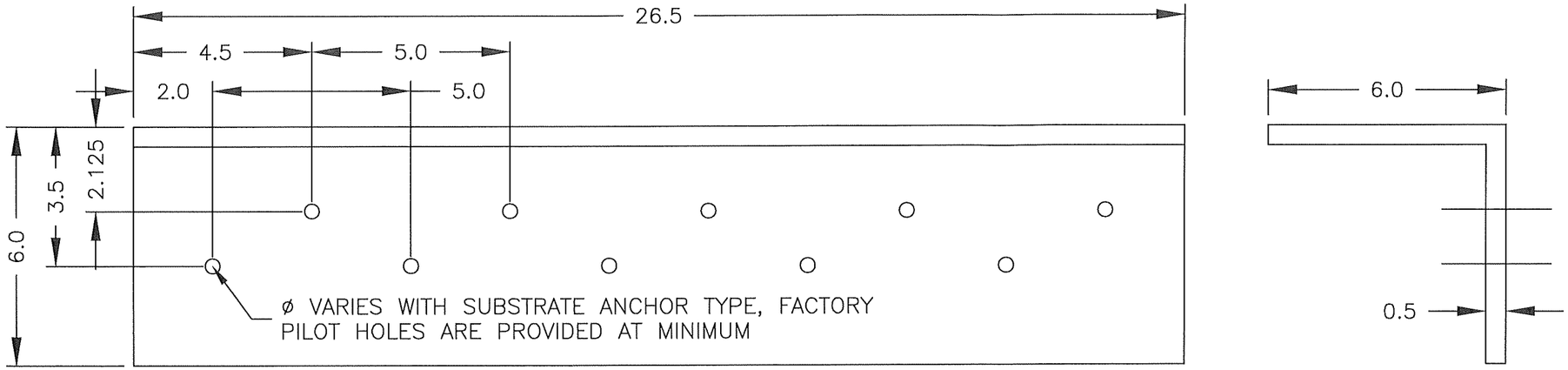

1 48A2

MULLION MOUNTING ANGLE FOR STEEL & WOOD
CONTINUOUS ANGLE MOUNT, ≤ 144H
6061–T6, 0.5 ALUMINUM

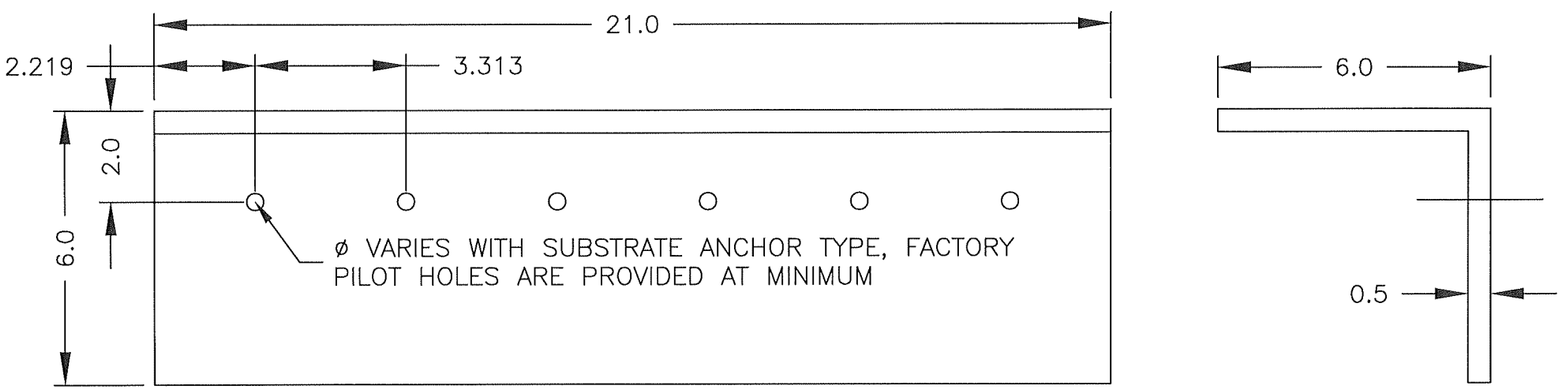

1 48B2

MULLION MOUNTING ANGLE FOR STEEL & WOOD
CONTINUOUS ANGLE MOUNT, ≤ 96H
6061–T6, 0.5 ALUMINUM

PRODUCT REVISED
as complying with the Florida Building Code
NOA-No. 24-0930.04
Expiration Date 12/06/2029
By
Miami-Dade Product Control

REV 01: 8/1/24, MOVED ITEM 48 TO THIS NEW PAGE & SPLIT IT INTO SIX ITEMS WITH 48A2/B2 ON THIS PAGE & ITEMS 48A1/B1 & 48A3/B3 ON OTHER PAGES, UPDATED HOLE PATTERNS & LENGTH OF ITEMS 48A2/B2.

DRAWN BY MES
DATE 8/9/2017
SCALE
SHEET NO. 29 OF 37
CAD DRAWING NO. ESD-635D

GREENHECK
P.O.BOX 410 SCHOFIELD, WISCONSIN 54476-0410

TITLE
ESD-635D LOUVER
CONTINUOUS ANGLE MOUNT
MULLION ANGLE, STEEL/WOOD
PART PROFILES

WAYNE K. HELMILA
LICENSE
No. 59092
STATE OF FLORIDA
PROFESSIONAL ENGINEER

SEP 27 2024

RICE
ENGINEERING
105 School Creek Trail
Luxemburg, WI 54217
Phone: (920) 617-1042
Fax: (920) 617-1100
www.rice-inc.com
Florida Firm No: F-01000005061
Certificate of Authorization: #9090
Wayne K. Helmila
Registration No: 59092

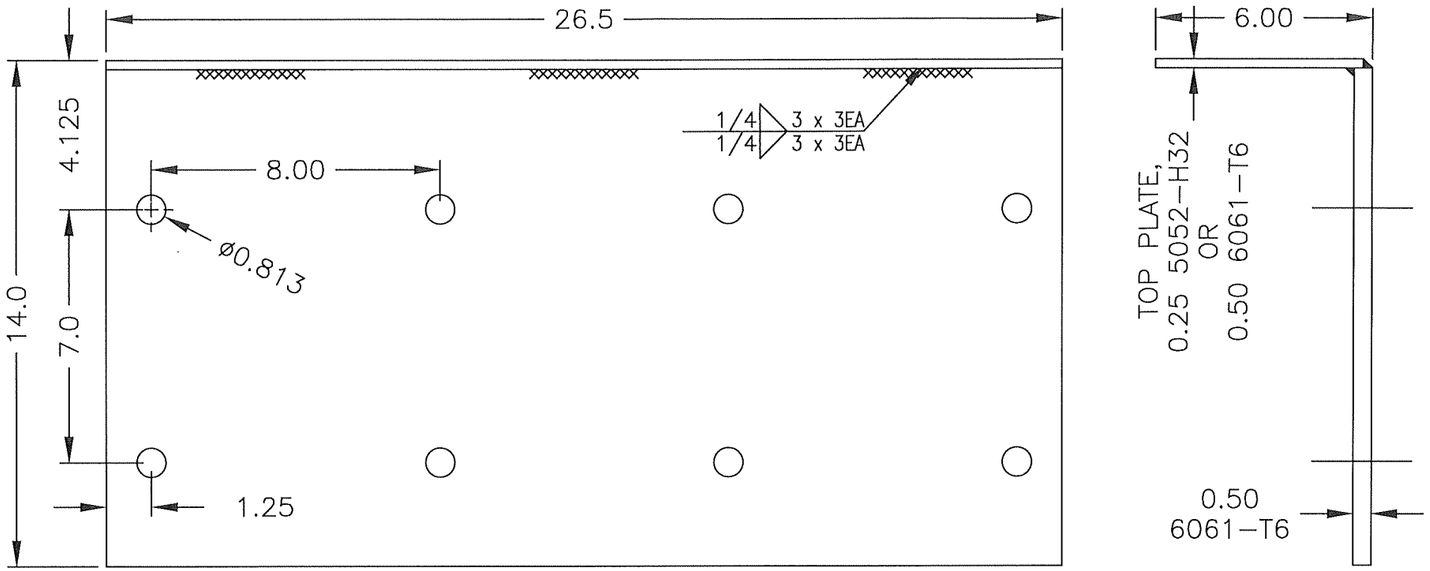

① 48A3

MULLION MOUNTING ANGLE FOR GROUT FILLED CMU
CONTINUOUS ANGLE MOUNT, ≤ 144H
5052-H32 &/OR 6061-T6, 0.25 &/OR 0.5 ALUMINUM

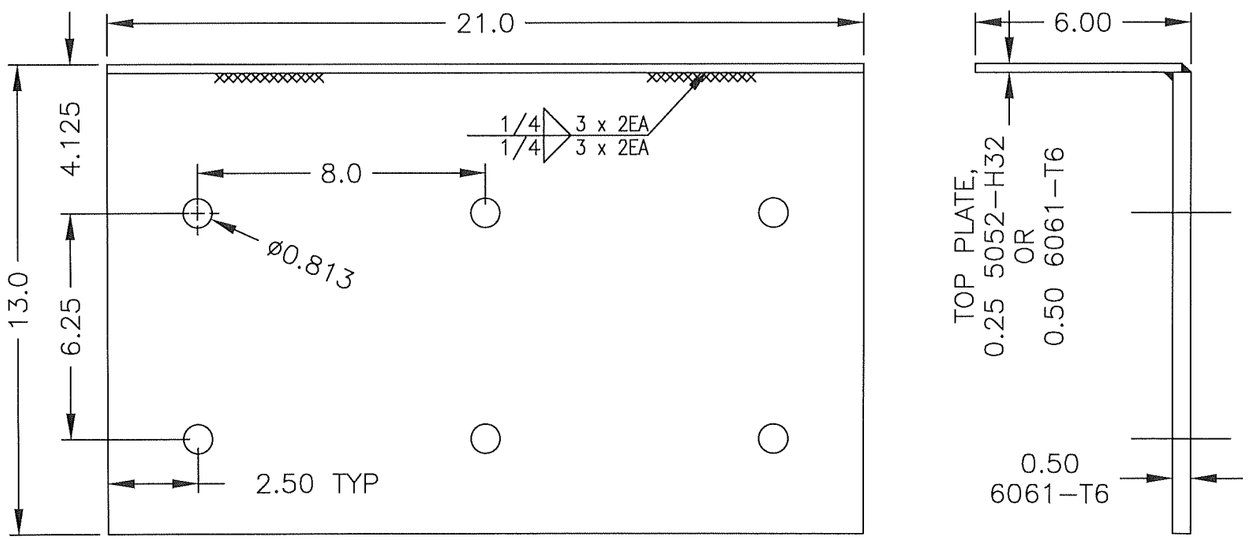

① 48B3

MULLION MOUNTING ANGLE FOR GROUT FILLED CMU
CONTINUOUS ANGLE MOUNT, ≤ 96H
5052-H32 &/OR 6061-T6, 0.25 &/OR 0.5 ALUMINUM

REV 01: 8/1/24, MOVED ITEM 48 TO THIS NEW PAGE & SPLIT IT INTO SIX ITEMS WITH 48A3/B3 ON THIS PAGE & ITEMS 48A1/B1 & 48A2/B2 ON OTHER PAGES, UPDATED HOLE PATTERNS & LENGTH OF ITEMS 48A3/B3.

PRODUCT REVISED
as complying with the Florida Building Code
NOA-No. 24-0930.04
Expiration Date 12/06/2029
By
Miami-Dade Product Control

DRAWN BY MES
DATE 8/9/2017
SCALE
SHEET NO. 30 OF 37
CAD DRAWING NO. ESD-635D

GREENHECK
P.O.BOX 410 SCHOFIELD, WISCONSIN 54476-0410

TITLE
ESD-635D LOUVER
CONTINUOUS ANGLE MOUNT
MULLION ANGLE, GROUT FILLED CMU
PART PROFILES

WAYNE K. HELMILA
LICENSE
No. 59092
STATE OF FLORIDA
PROFESSIONAL ENGINEER

SEP 27 2024

RICE
ENGINEERING
105 School Creek Trail
Luxemburg, WI 54217
Phone: (920) 617-1042
Fax: (920) 617-1100
www.rice-inc.com
Florida Firm No: F-01000005061
Certificate of Authorization: #9090
Wayne K. Helmila
Registration No: 59092

HEIGHT & SUBSTRATE: ≤ 144 IN. & CRACKED CONCRETE, 6.0 THICK
MOUNTING: CONTINUOUS ANGLE, MULLION END PLATE

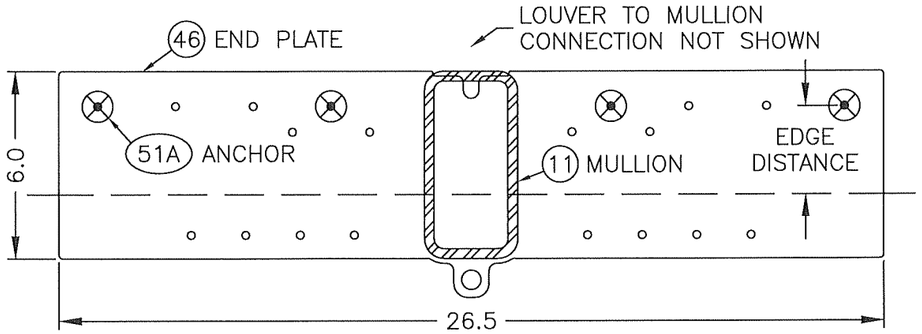

ANCHOR 51A: 5/8ø HILTI KWIK BOLT TZ2, 300 SS, 4 EA

HEIGHT & SUBSTRATE: ≤ 144 IN. & STEEL, 0.125 THICK
MOUNTING: CONTINUOUS ANGLE, MULLION END PLATE

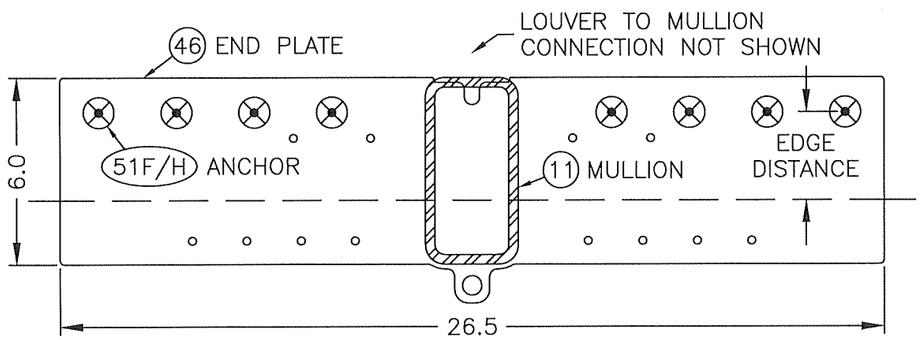

ANCHOR 51F: 1/4–14 (OR 20) SCREW (INCLUDES ELCO BI–FLEX)
OR 1/4–20 BOLT, 300 SS, 8 EA (SHOWN)
ANCHOR 51H: 5/16–18 BOLT, 300 SS, 6 EA

HEIGHT & SUBSTRATE: ≤ 144 IN. & WOOD, 3.0 THICK
MOUNTING: CONTINUOUS ANGLE, MULLION END PLATE

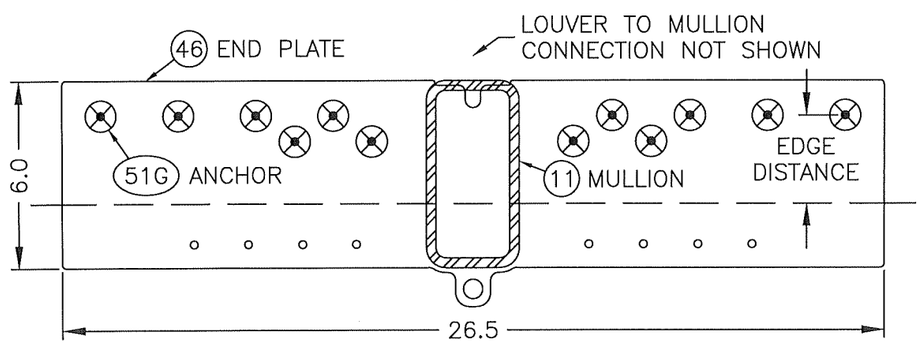

ANCHOR 51G: 3/8ø LAG SCREW, 300 SS, 12 EA

HEIGHT & SUBSTRATE: ≤ 96 & CRACKED CONCRETE, 5.0 THICK
MOUNTING: CONTINUOUS ANGLE, MULLION END PLATE

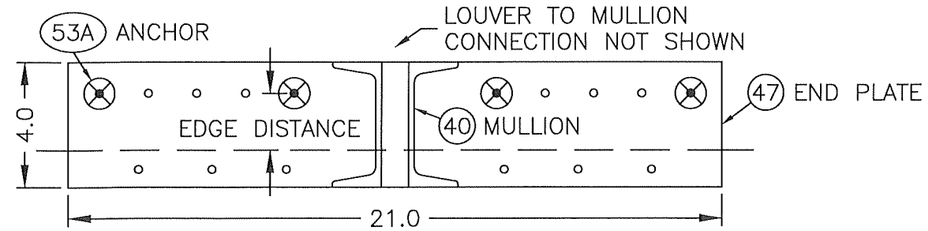

ANCHOR 53A: 1/2ø HILTI KWIK BOLT TZ2, 300 SS, 4 EA

HEIGHT & SUBSTRATE: ≤ 96 IN. & STEEL, 0.125 THICK
MOUNTING: CONTINUOUS ANGLE, MULLION END PLATE

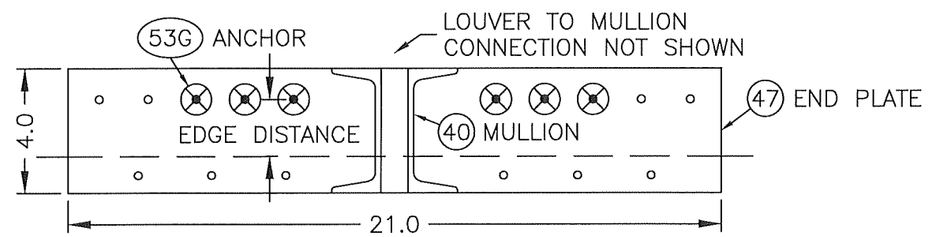

ANCHOR 53G: 1/4–14 (OR 20) SCREW (INCLUDES ELCO BI–FLEX)
OR 1/4–20 BOLT, 300 SS, 6 EA

HEIGHT & SUBSTRATE: ≤ 96 IN. & WOOD, 3.0 THICK
MOUNTING: CONTINUOUS ANGLE, MULLION END PLATE

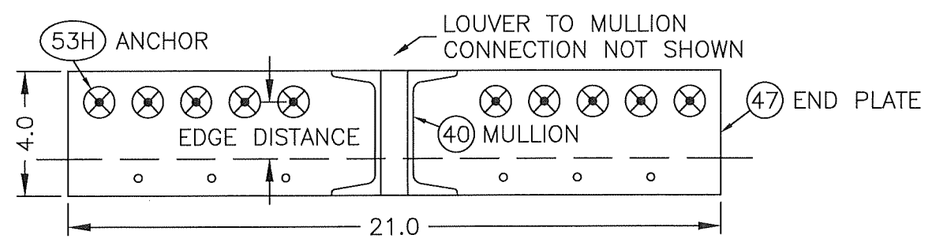

ANCHOR 53H: 3/8ø LAG SCREW, 300 SS, 10 EA

ALL ITEMS THIS PAGE:
FACTORY PROVIDES PILOT OR FULL SIZE HOLES AT REQ'D LOCATIONS PER SELECTED SUBSTRATE, AND NON–REQ'D PILOT HOLES MAY STILL BE PRESENT. OTHER HOLES & PATTERNS CAN BE USED IF ANCHOR ON–CENTER & EDGE DISTANCE REQUIREMENTS ARE MET. ANCHOR PATTERS SHALL BE MIRRORED WHEN POSSIBLE.

PRODUCT REVISED
as complying with the Florida Building Code
NOA–No. 24–0930.04
Expiration Date 12/06/2029
By
Miami–Dade Product Control

REV 01: 8/1/24, NEW PAGE TO SHOW VARIOUS SUBSTRATE ANCHOR LAYOUTS.

DATE 8/9/2017
DRAWN BY MES
SCALE
SHEET NO. 31 OF 37
CAD DRAWING NO. ESD–635D

GREENHECK
P.O.BOX 410 SCHOFIELD, WISCONSIN 54476-0410

TITLE
ESD–635D LOUVER
CONTINUOUS ANGLE MOUNT
MULLION END PLATE LAYOUTS
H≤144" & H≤96"

WAYNE K. HELMILA
LICENSE
No. 59092
STATE OF FLORIDA
PROFESSIONAL ENGINEER

SEP 27 2024

RICE
ENGINEERING
105 School Creek Trail
Luxemburg, WI 54217
Phone: (920) 617-1042
Fax: (920) 617-1100
www.rice-inc.com
Florida Firm No: F-01000005061
Certificate of Authorization: #9090
Wayne K. Helmila
Registration No: 59092

HEIGHT & SUBSTRATE: ≤ 144 IN. & CRACKED CONCRETE, 6.0 THICK
MOUNTING: CONTINUOUS ANGLE MOUNT, MULLION MOUNTING ANGLE

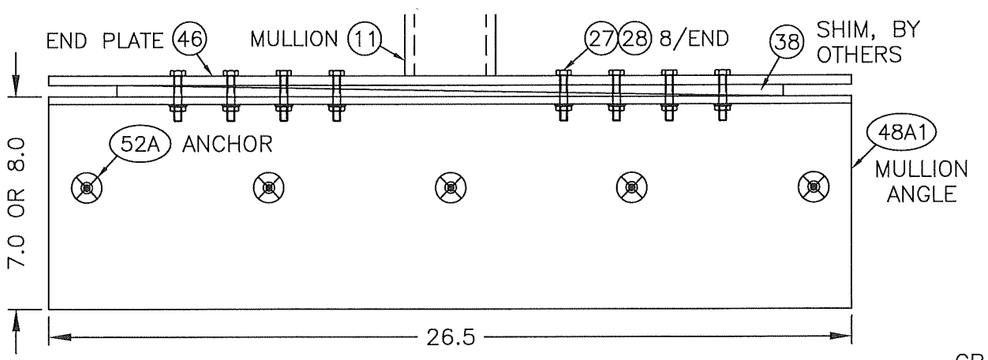

ANCHOR 52A: 1/2ø HILTI KWIK BOLT TZ2, 300 SS, 5 EA

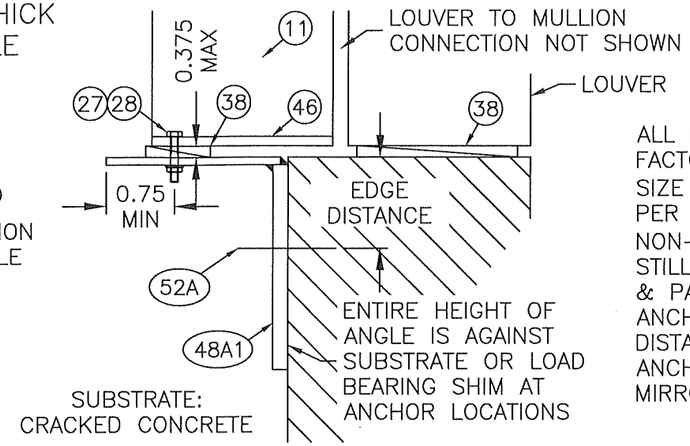

ALL ITEMS THIS PAGE:
FACTORY PROVIDES PILOT OR FULL SIZE HOLES AT REQ'D LOCATIONS PER SELECTED SUBSTRATE, AND NON-REQ'D PILOT HOLES MAY STILL BE PRESENT. OTHER HOLES & PATTERNS CAN BE USED IF ANCHOR ON-CENTER & EDGE DISTANCE REQUIREMENTS ARE MET. ANCHOR PATTERS SHALL BE MIRRORED WHEN POSSIBLE.

HEIGHT & SUBSTRATE: ≤ 144 IN. & STEEL, 0.188 & 0.144 THICK
MOUNTING: CONTINUOUS ANGLE MOUNT, MULLION MOUNTING ANGLE

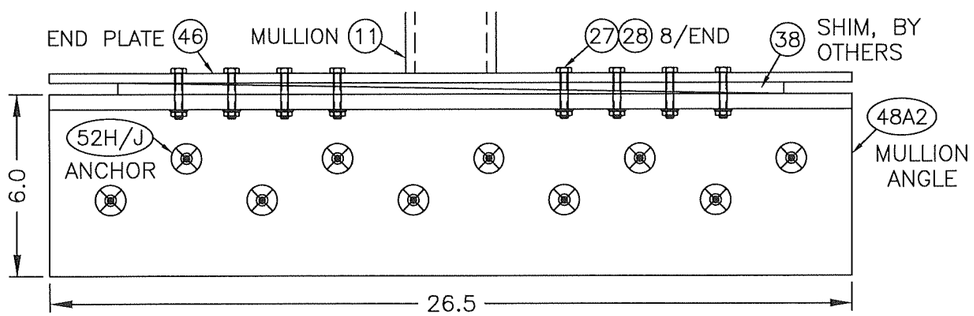

ANCHOR 52H: 0.160 STEEL, 1/4-20 SCREW (INCLUDES ELCO BI-FLEX) OR BOLT, 300 SS, 10 EA
ANCHOR 52J: 0.144 THICK, 5/16-18 BOLT, 300 SS, 3 EA

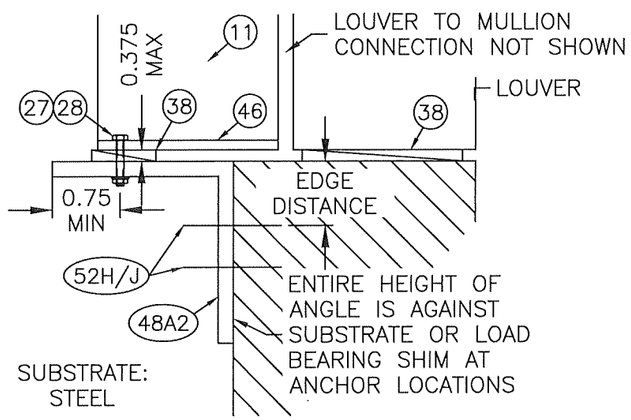

HEIGHT & SUBSTRATE: ≤ 144 IN. & WOOD, 3.0 THICK
MOUNTING: CONTINUOUS ANGLE MOUNT, MULLION MOUNTING ANGLE

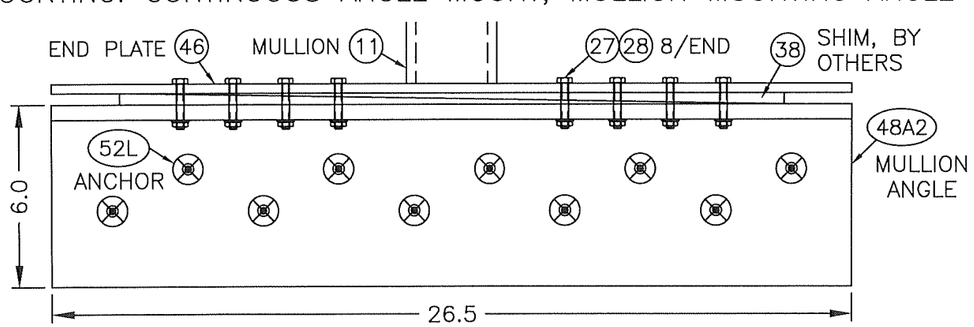

ANCHOR 52L: 3/8ø LAG SCREW, 300 SS, 10 EA

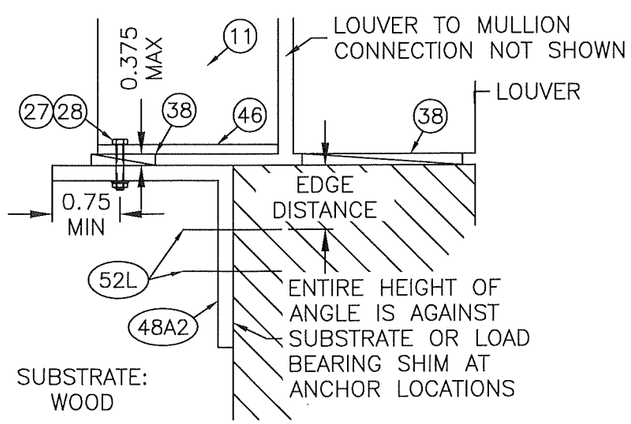

PRODUCT REVISED
as complying with the Florida Building Code
NOA-No. 24-0930.04
Expiration Date 12/06/2029
By
Miami-Dade Product Control

REV 01: 8/1/24, NEW PAGE TO SHOW VARIOUS SUBSTRATE ANCHOR LAYOUTS.

DATE	8/9/2017
DRAWN BY	MES
SCALE	
SHEET NO.	32 OF 37
CAD DRAWING NO.	ESD-635D

GREENHECK
P.O.BOX 410 SCHOFIELD, WISCONSIN 54476-0410

TITLE: ESD-635D LOUVER
CONTINUOUS ANGLE MOUNT
MULLION MTG. ANGLE LAYOUTS
H≤144"

WAYNE K. HELMILA
LICENSE
No. 59092
STATE OF FLORIDA
PROFESSIONAL ENGINEER

SEP 27 2024

RICE
ENGINEERING
105 School Creek Trail
Luxemburg, WI 54217
Phone: (920) 617-1042
Fax: (920) 617-1100
www.rice-inc.com
Florida Firm No: F-01000005061
Certificate of Authorization: #9090
Wayne K. Helmila
Registration No: 59092

HEIGHT & SUBSTRATE: ≤ 96 IN. & CRACKED CONCRETE, 5.0 THICK
MOUNTING: CONTINUOUS ANGLE MOUNT, MULLION MOUNTING ANGLE

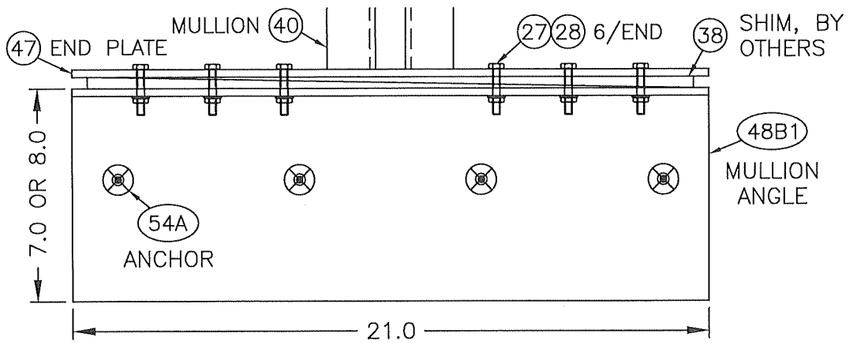

ANCHOR 54A: 1/2ø HILTI KWIK BOLT TZ2, 300 SS, 4 EA

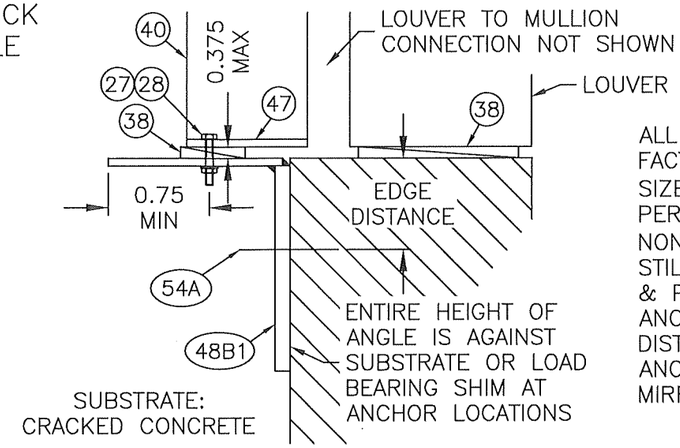

ALL ITEMS THIS PAGE:
FACTORY PROVIDES PILOT OR FULL SIZE HOLES AT REQ'D LOCATIONS PER SELECTED SUBSTRATE, AND NON-REQ'D PILOT HOLES MAY STILL BE PRESENT. OTHER HOLES & PATTERNS CAN BE USED IF ANCHOR ON-CENTER & EDGE DISTANCE REQUIREMENTS ARE MET. ANCHOR PATTERS SHALL BE MIRRORED WHEN POSSIBLE.

HEIGHT & SUBSTRATE: ≤ 96 IN. & STEEL, 0.160 & 0.125 THICK
MOUNTING: CONTINUOUS ANGLE MOUNT, MULLION MOUNTING ANGLE

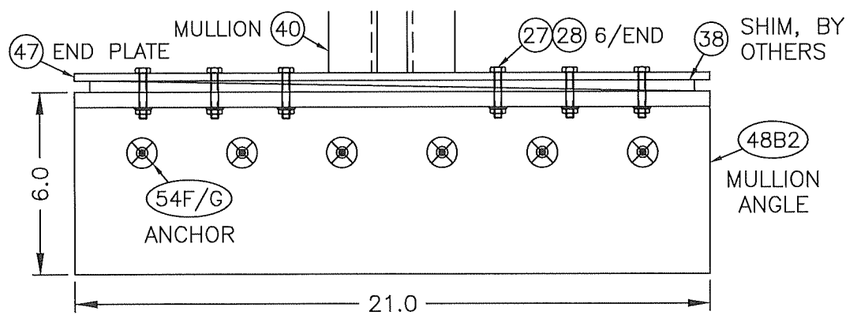

ANCHOR 54F: 0.160 STEEL, 1/4-20 SCREW (INCLUDES ELCO BI-FLEX) OR BOLT, 300 SS, 6 EA
ANCHOR 54G: 0.125 STEEL, 5/16-18 BOLT, 300 SS, 2 EA

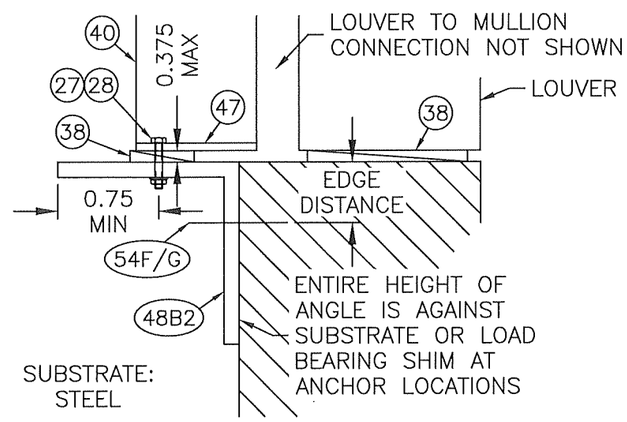

HEIGHT & SUBSTRATE: ≤ 96 IN. & WOOD, 3.0 THICK
MOUNTING: CONTINUOUS ANGLE MOUNT, MULLION MOUNTING ANGLE

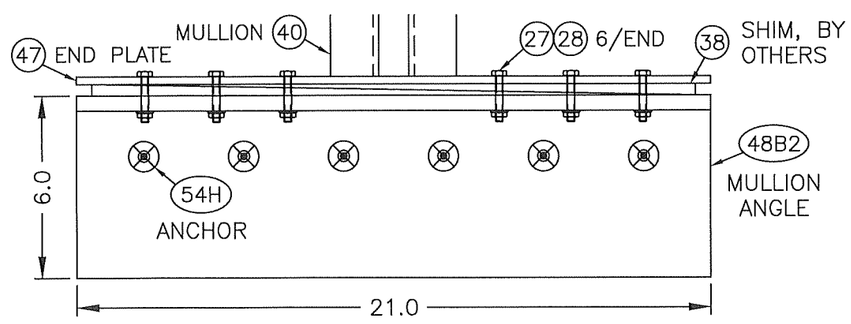

ANCHOR 54H: 3/8ø LAG SCREW, 300 SS, 6 EA

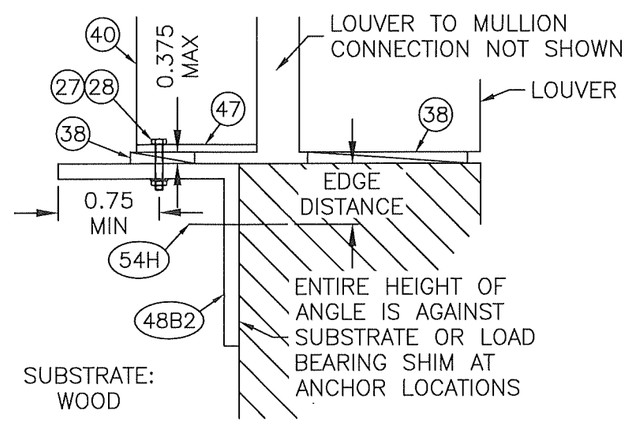

REV 01: 8/1/24, NEW PAGE TO SHOW VARIOUS SUBSTRATE ANCHOR LAYOUTS.

PRODUCT REVISED
as complying with the Florida Building Code
NOA-No. 24-0930.04
Expiration Date 12/06/2029
By
Miami-Dade Product Control

DATE 8/9/2017
DRAWN BY MES
SCALE
SHEET NO. 33 OF 37
CAD DRAWING NO. ESD-635D

GREENHECK
P.O.BOX 410 SCHOFIELD, WISCONSIN 54476-0410

TITLE
ESD-635D LOUVER
CONTINUOUS ANGLE MOUNT
MULLION MTG. ANGLE LAYOUTS
H≤96"

WAYNE K. HELMILA
LICENSE
No. 59092
STATE OF FLORIDA
PROFESSIONAL ENGINEER

SEP 27 2024

RICE
ENGINEERING
105 School Creek Trail
Luxemburg, WI 54217
Phone: (920) 617-1042
Fax: (920) 617-1100
www.rice-inc.com
Florida Firm No: F-01000005061
Certificate of Authorization: #9090
Wayne K. Helmila
Registration No: 59092

HEIGHT & SUBSTRATE: ≤ 144 IN. & GROUT FILLED CMU, 8.0 NOM.
MOUNTING: CONTINUOUS ANGLE MOUNT, MULLION MOUNTING ANGLE

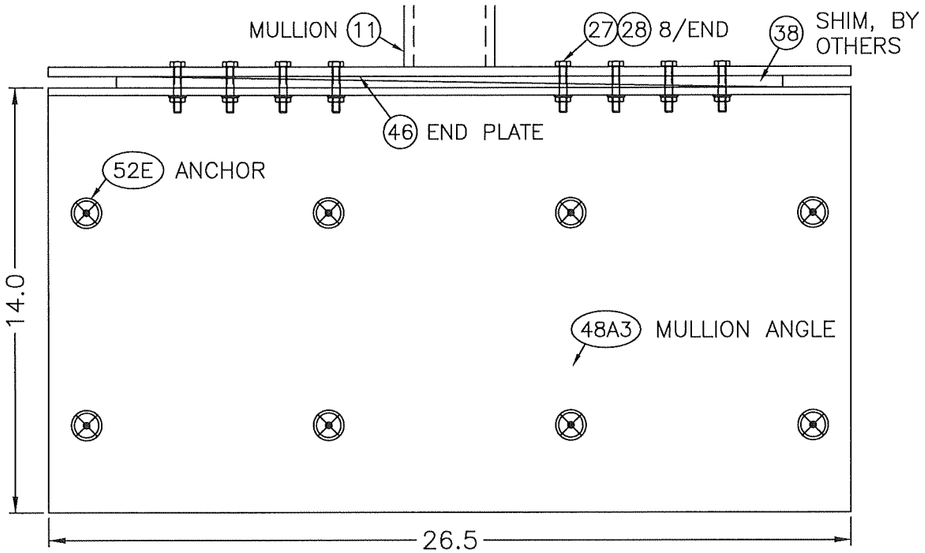

ANCHOR 52E: HILTI HY-100 EPOXY & 5/8ø THREADED ROD, 300 SS, 8 EA

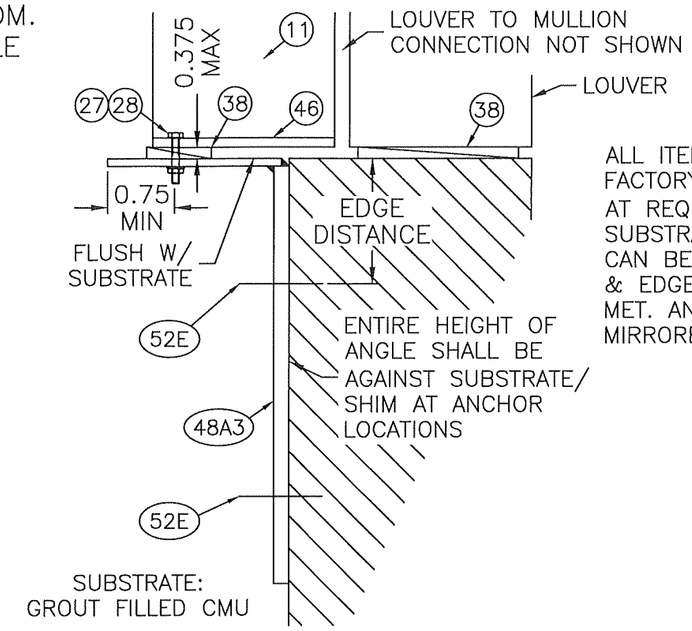

ALL ITEMS THIS PAGE:
FACTORY PROVIDES FULL SIZE HOLES AT REQ'D LOCATIONS PER SELECTED SUBSTRATE. OTHER HOLE PATTERNS CAN BE USED IF ANCHOR ON-CENTER & EDGE DISTANCE REQUIREMENTS ARE MET. ANCHOR PATTERS SHALL BE MIRRORED WHEN POSSIBLE.

HEIGHT & SUBSTRATE: ≤ 96 IN. & GROUT FILLED CMU, 8.0 NOM.
MOUNTING: CONTINUOUS ANGLE MOUNT, MULLION MOUNTING ANGLE

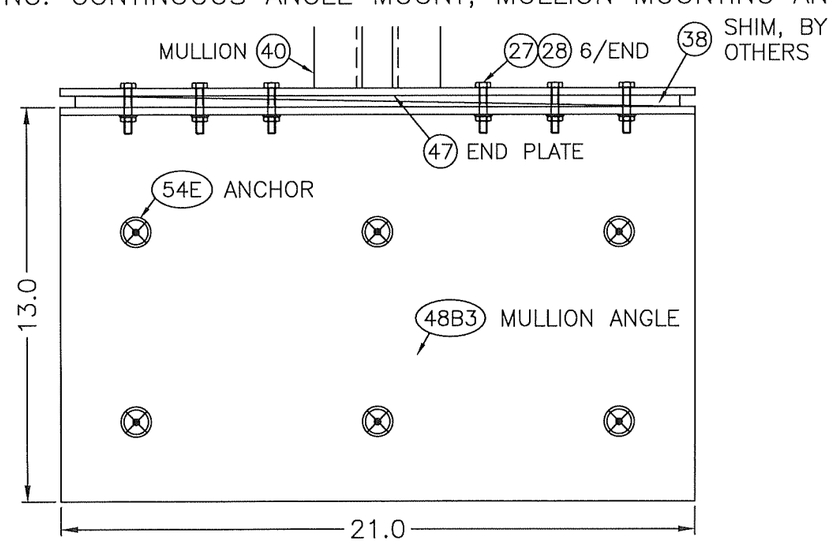

ANCHOR 54E: W/ HILTI HY-100 EPOXY & 5/8ø THREAD ROD, 300 SS, 6 EA

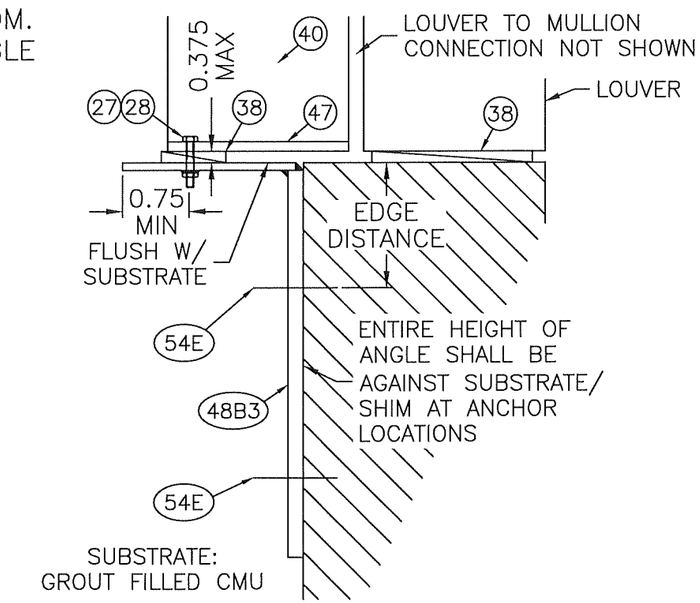

PRODUCT REVISED
as complying with the Florida Building Code
NOA-No. 24-0930.04
Expiration Date 12/06/2029
By
Miami-Dade Product Control

REV 01: 8/1/24, NEW PAGE TO SHOW VARIOUS SUBSTRATE ANCHOR LAYOUTS.

DRAWN BY MES	DATE 8/9/2017
SCALE	
SHEET NO. 34 OF 37	CAD DRAWING NO. ESD-635D

GREENHECK
P.O.BOX 410 SCHOFIELD, WISCONSIN 54476-0410

TITLE
ESD-635D LOUVER
CONTINUOUS ANGLE MOUNT
MULLION MTG. ANGLE LAYOUTS
H≤144" & H≤96"

WAYNE K. HELMILA
LICENSE
No. 59092
STATE OF FLORIDA
PROFESSIONAL ENGINEER

SEP 27 2024

RICE
ENGINEERING
105 School Creek Trail
Luxemburg, WI 54217
Phone: (920) 617-1042
Fax: (920) 617-1100
www.rice-inc.com

Florida Firm No: F-01000005061
Certificate of Authorization: #9090
Wayne K. Helmila
Registration No: 59092

① SUBSTRATE ANCHOR TABLE

ITEM 50: JAMB PERIMETER ANGLE ANCHOR, HEIGHT ≤ 144

ITEM	CRACKED CONCRETE	G.F. CMU	STEEL	WOOD	MIN VALUE	MIN (1) THICKNESS	ANCHOR TYPE	DIA. ø	# REQ'D	CENTERS	MIN EMBED.	SUBSTRATE MIN EDGE (3)
50A	X				3 KSI	4.0	HILTI KWIK HUS EZ (KH-EZ), 300 SS	3/8	VARIES	6.0 MIN/MAX	2.5 NOM.	1.5
50E		X			1.5 KSI	3.0	DEWALT AGGRE-GATOR, 300 SS	1/4	VARIES	3.0 MIN 6.0 MAX	2.0 NOM.	2.0
50F			X		A36	0.125	BOLT OR SCREW, 300 SS, INCLUDES ELCO BI-FLEX	1/4-20	VARIES	6.0 MAX	0.125	0.75
50H			X		A36	0.125	BOLT, 300 SS	5/16-18	VARIES	6.0 MAX	0.125	0.75
50G				X	SG 0.42	3.0	LAG, MIN 3.0 LONG, MIN 2.0 L. THREADS (EXCL. TIP), 300 SS	3/8	VARIES	2.0 MIN 6.0 MAX	2.375	1.5

ITEM 51: MULLION END PLATE ANCHOR, HEIGHT ≤ 144

ITEM	CRACKED CONCRETE	G.F. CMU	STEEL	WOOD	MIN VALUE	MIN (1) THICKNESS	ANCHOR TYPE	DIA. ø	# REQ'D	MIN CENTERS	MIN EMBED.	SUBSTRATE MIN EDGE (3)
51A	X				3 KSI	6.0	HILTI KWIK BOLT TZ2, 300 SS	5/8	4/END	7.5 & 9.0	3.25 NOM.	4.0
51F			X		A36	0.125	BOLT OR SCREW, 300 SS, INCLUDES ELCO BI-FLEX	1/4-14 1/4-20	8/END	1.0	0.125	0.5
51H			X		A36	0.125	BOLT, 300 SS	5/16-18	6/END	1.5	0.125	0.5
51G				X	SG 0.42	3.0	LAG, MIN 3.0 LONG, MIN 2.0 L. THREADS (EXCL. TIP), 300 SS	3/8	12/END	1.5	2.375	1.75

ITEM 52: MULLION ANGLE MOUNT ANCHOR, HEIGHT ≤ 144

ITEM	CRACKED CONCRETE	G.F. CMU	STEEL	WOOD	MIN VALUE	MIN (1)(2) THICKNESS	ANCHOR TYPE	DIA. ø	# REQ'D	MIN CENTERS	MIN EMBED.	SUBSTRATE MIN EDGE (3)
52A	X				3 KSI	6.0	HILTI KWIK BOLT TZ2 (KB-TZ2), 300 SS	1/2	5/ANG.	6.0	3.0 NOM.	3.0 EDGE 1 4.0 EDGE 2
52E		X			2 KSI GROUT	8.0 NOM.	HILTI HIT-HY 100 EPOXY & THREADED ROD, 300 SS	5/8	8/ANG.	8.0 HOR. 7.0 VER.	5.625 ACT.	4.125
52H			X		A36	0.188	BOLT OR SCREW, 300 SS, INCLUDES ELCO BI-FLEX	1/4-20	10/ANG.	1.0	0.188	0.5
52J			X		A36	0.144	BOLT, 300 SS	5/16-18	3/ANG.	1.0	0.144	0.75
52L				X	SG 0.42	3.0	LAG, MIN 3.5 LONG, MIN 2.25 L. THREADS (EXCL. TIP), 300 SS	3/8	10/ANG.	2.0	2.875	2.0

ITEM 53: MULLION END PLATE ANCHOR, HEIGHT ≤ 96

ITEM	CRACKED CONCRETE	G.F. CMU	STEEL	WOOD	MIN VALUE	MIN (1) THICKNESS	ANCHOR TYPE	DIA. ø	# REQ'D	MIN CENTERS	MIN EMBED.	SUBSTRATE MIN EDGE (3)
53A	X				3 KSI	5.0	HILTI KWIK BOLT TZ2, 300 SS	1/2	4/END	6.25 & 6.5	3.0 NOM.	2.5 EDGE 1 3.25 EDGE 2
53G			X		A36	0.125	BOLT OR SCREW, 300 SS, INCLUDES ELCO BI-FLEX	1/4-14 1/4-20	6/END	1.0	0.125	0.5
53H				X	SG 0.42	3.0	LAG, MIN 3.0 LONG, MIN 2.0 L. THREADS (EXCL. TIP), 300 SS	3/8	10/END	1.5	2.375	1.75

ITEM 54: MULLION ANGLE MOUNT ANCHOR, HEIGHT ≤ 96

ITEM	CRACKED CONCRETE	G.F. CMU	STEEL	WOOD	MIN VALUE	MIN (1)(2) THICKNESS	ANCHOR TYPE	DIA. ø	# REQ'D	MIN CENTERS	MIN EMBED.	SUBSTRATE MIN EDGE (3)
54A	X				3 KSI	5.0	HILTI KWIK BOLT TZ2, 300 SS	1/2	4/ANG.	6.0	2.5 NOM.	3.0 EDGE 1 4.0 EDGE 2
54E		X			2 KSI GROUT	8.0 NOM.	HILTI HIT-HY 100 EPOXY & THREADED ROD, 300 SS	5/8	6/ANG.	8.0 HOR. 6.25 VER.	5.625 ACT.	4.125
54F			X		A36	0.160	BOLT OR SCREW, 300 SS, INCLUDES ELCO BI-FLEX	1/4-20	6/ANG.	1.0	0.16	0.5
54G			X		A36	0.125	BOLT, 300 SS	5/16-18	6/ANG.	1.0	0.125	0.75
54H				X	SG 0.42	3.0	LAG, MIN 3.5 LONG, MIN 2.25 L. THREADS (EXCL. TIP), 300 SS	3/8	6/ANG.	2.0	2.875	2.0

NOTES: (1) IN DIRECTION OF ANCHOR PENETRATION. (2) SUBSTRATE THICKNESS IS ONE PORTION OF OVERALL WALL DEPTH. (3) EDGE 1 IS CLOSEST TO ANCHOR, AND EDGE 2 IS OPPOSITE EDGE 1. IF EDGE # NOT SPECIFIED, THEN MIN VALUE IS SAME TO BOTH EDGES.

REV 01: 8/1/24, MOVED ANCHOR TABLE TO THIS NEW PAGE, REMOVED ALL POWERS WEDGE BOLT & ALL SCOTS TAPCON ANCHORS, ADDED CRACKED TO CONCRETE COLUMN, ADDED G.F. TO CMU COLUMN, ADDED MIN THICKNESS COLUMN, REMOVED GROUP CENTER COLUMN, UPDATED ALL CONCRETE TO 3 KSI, UPDATED GROUT TO 2 KSI FOR ITEMS 52E & 54E, UPDATED ALL STEEL TO A36, ALLOY ADDED TO ALL ANCHORS, ALL CONCRETE ANCHORS ARE NOW HILTI KWIK HUS EZ OR HILTI KWIK BOLT TZ2, ALL CMU ANCHORS ARE NOW DEWALT AGGRE-GATOR OR HILTI HY-100 EPOXY & THREADED ROD, ALL LAG SCREWS HAVE MIN LENGTH SPECIFIED, ADDED ELCO BI-FLEX TO ITEMS 50F & 51F & 52H & 53G & 54F, ADDED THREAD VALUES TO ALL BOLT & SCREW ANCHORS, REMOVED ITEMS 50B/C/D & 51B/C/D/E & 52B/C/D/F/G/I/K & 53B/C/D/E/F & 54B/C/D/I, ADDED ITEMS 50H & 51H, UPDATED DIAMETER OF ITEMS 51A & 52A/E & 53A & 54A/E/G, UPDATED THE NUMBER REQ'D OF ITEMS 51A/G & 52A/E/H/J/L & 53A & 54E/F/H, UPDATED CENTERS OF ITEMS 50E/G & 51A & 52A/E/L & 53A & 54A/E/H, UPDATED EMBEDMENT OF ITEMS 50A/E & 51A & 52A/E/J & 53A & 54A/E/F, UPDATED SUBSTRATE EDGE OF ITEMS 50A/E/F & 51A & 52A/E/J/L & 53A & 54A/E/G/H, REMOVED OLD ASTERISK & CRACKED CONCRETE NOTES, & ADDED NOTES 1/2/3.

PRODUCT REVISED
as complying with the Florida Building Code
NOA-No. 24-0930.04
Expiration Date 12/06/2029
By
Miami-Dade Product Control

DATE 8/9/2017
DRAWN BY MES
SCALE
SHEET NO. 35 OF 37
CAD DRAWING NO. ESD-635D

GREENHECK
P.O.BOX 410 SCHOFIELD, WISCONSIN 54476-0410

TITLE
ESD-635D LOUVER
CONTINUOUS ANGLE MOUNT
SUBSTRATE ANCHOR TABLE
H≤144" & H≤96"

WAYNE K. HELMILA
LICENSE
No. 59092
STATE OF FLORIDA
PROFESSIONAL ENGINEER

SEP 27 2024

RICE
ENGINEERING
105 School Creek Trail
Luxemburg, WI 54217
Phone: (920) 617-1042
Fax: (920) 617-1100
www.rice-inc.com
Florida Firm No: F-01000005061
Certificate of Authorization: #9090
Wayne K. Helmila
Registration No: 59092

ITEM	DESCRIPTION	MATERIAL	NOTES
1	LOUVER HEAD	6063-T5 ALUM.	
2	LOUVER BLADE	6063-T5 ALUM.	2.125 MAX SPACING
3	LOUVER SILL	6063-T5 ALUM.	
4	LOUVER JAMB	6063-T5 ALUM.	
5	LOUVER/DAMPER FLANGE	6063-T5 ALUM.	
6	FORMED SLEEVE, 0.125 THICK	5052-H32 ALUM.	1.25 FLANGE, 12" & 16" DEPTH IS TYP BUT CAN VARY ①
7A	1.5 x 1.5 x 1/4 ANGLE	6063-T5 ALUM.	BLADE SUPPORT ANGLE
7B			AT HEAD/SILL/JAMBS OF SLEEVE
8	1.5 x 6 x 1/8 ANGLE	6005-T5 ALUM.	JAMB MULLION ANGLE ①
9	1.5 x 1.5 x 1/8 ANGLE, MIN SIZE	6063-T5 ALUM.	AT HEAD/SILL/JAMBS OF LOUVER
10	1.25 x 1.5 x 1/8 ANGLE	6063-T5 ALUM.	AT HEAD/SILL OF SLEEVE FLANGE ①
11	3 x 6 x 5/16 TUBE	A36 STEEL	SHIP LOOSE, COATED STEEL ①
12	4 x 6 x 1/4 ALUM SHIM	5052-H32 ALUM.	AT SILL UNDER SUPPORT ANGLE
13	BLADE BRACKET	6063-T5 ALUM.	4.5 LONG
14	DAMPER HEAD/SILL	6063-T5 ALUM.	
15	DAMPER JAMB	6063-T5 ALUM.	
16	DAMPER BLADE	6063-T5 ALUM.	3.75 MAX SPACING
17	DAMPER BLADE SEAL	SILICONE/RUBBER	MATERIAL VARIES
18	DAMPER JAMB SEAL	SS	SS = STAINLESS STEEL ①
19	DAMPER TOP/BOTTOM CLOSURE	ALUMINUM	
20	DAMPER LINKAGE BAR	SS OR ZP	ZP = ZINC PLATED OR GALV. ①
21	DAMPER AXLE BUSHING	DELRIN OR BRONZE	①
22A	NON-DRIVE SIDE, DAMPER AXLE ASSEMBLY	ZP STEEL & DELRIN	ZP STEEL PIN W/DELRIN BUSHING
22B		ZP STEEL & BRONZE	ZP STEEL PIN W/BRONZE BUSHING
22D		SS & DELRIN	SS PIN W/ DELRIN BUSHING
22E		SS & BRONZE	SS PIN W/ BRONZE BUSHING
23	DRIVE SIDE, DAMPER AXLE ASSEMBLY	SS OR ZP	①
24	1/4 DIA. E-CLIP	SS OR ZP	①
25	#8 x 0.75 SCREW	SS	
26	1/4 OR #14 x 0.75 SCREW	SS OR ZP	①
27	1/4-20 BOLT, LENGTH VARIES	SS, ZP	ZP ONLY FOR WITH ITEM 31, ONE LONG BOLT CAN REPLACE MIRRORED PAIRS OF ITEM 36 AT MULLIONS ①
28	1/4-20 NUT	SS, ZP	
29	REINFORCING STRAP	SS	OPTIONAL
30	1/4-20 BALL SWIVEL	ZP	
31	DAMPER BLADE DRIVE LEVER	SS OR ZP	①
32	DAMPER MANUAL QUADRANT ACTUATOR	VARIES	OTHER STYLES/TYPES ALLOWED ①
33	5/16ø LINKAGE ROD	SS OR ZP	①
34	#10 x 0.75 SCREW	300 SS	①
35	#10 x 1.25 SCREW	300 SS	①
36	1/4-14 OR -20 ELCO BI-FLEX SCREW	300 SS & COATED STEEL	ITEM 36 CAN REPLACE 37, ITEMS 27/28 CAN REPLACE PAIRS OF 36 AT MULLION OR REPLACE 36 OR 37 ①
37	1/4ø SCREW	300 SERIES SS	
38A	DEAD LOAD SHIM, OR OTHER SUPPORT	VARIES	NOT BY MANUFACTURER, SEALANT AS NEEDED ①
38B	SEALANT & OPTIONAL BACKER ROD		
39	2 x 5.25 x 0.25 MULLION ANGLE	6063-T5 ALUM.	AT MULLION OF LOUVER/SLEEVE ①
40	4-INCH MULLION CHANNEL	6061-T6 ALUM.	AT MULLION OF LOUVER/SLEEVE ①
41	MULLION SLEEVE BRACKET	5052-H32 ALUM.	
42	1.5 x 1.5 x 1/8 ANGLE	6063-T5 ALUM.	MIN SIZE, JAMB ATTACHMENT ANGLE
43	BLADE SUPPORT BRACKET, OPTIONAL	6063-T5 ALUM.	ALTERNATE STYLE
44	STEEL MULLION END PLATE, ≤ 144H	COATED STEEL	FACTORY WELDED TO MULLION, 44/45 FOR SLEEVE MOUNT, 46/47 FOR CONTINUOUS ANGLE MOUNT ①
45	ALUMINUM MULLION END PLATE, ≤ 96H	5052-H32 ALUM.	
46	STEEL MULLION END PLATE, ≤ 144H	COATED STEEL	
47	ALUMINUM MULLION END PLATE, ≤ 96H	5052-H32 ALUM.	
48A1	MULLION MTG. ANG., ≤ 144H, CONCRETE	A1/B1: 5052-H32 &/OR 6061-T6 A2/B2: 6061-T6 A3/B3: 5052-H32 &/OR 6061-T6	IF NEEDED DUE TO WALL DEPTH, 48A1/B1 FOR CONCRETE, 48A2/B2 FOR STEEL & WOOD, 48A3/B3 FOR GROUT FILLED CMU ①
48A2	MULLION MTG. ANG., ≤ 144H, STL. & WD.		
48A3	MULLION MTG. ANG., ≤ 144H, G.F. CMU		
48B1	MULLION MTG. ANG., ≤ 96H, CONCRETE		
48B2	MULLION MTG. ANG., ≤ 96H, STL. & WD.		
48B3	MULLION MTG. ANG., ≤ 96H, G.F. CMU		
49	1/4ø x 0.5 MIN THREAD STUD	SS OR PLATED	

PRODUCT REVISED
as complying with the Florida Building Code
NOA-No. 24-0930.04
Expiration Date 12/06/2029
By
Miami-Dade Product Control

REV 01: 8/1/24, WAS PAGE 19, MOVED ANCHOR TABLE AND GENERAL NOTES TO NEW PAGES, CONDENSED SIMILAR ITEMS INTO A SINGLE ROW FOR #20/21/23/24/31, REMOVED #21C & #22C/F, ADDED DIMS TO #6, UPDATED ALLOY OF #8, UPDATED LENGTH OF ITEM #10, ADDED INFO TO #11/18/20/38, ADDED COATED STEEL TO #11/46, ADDED 1/4" OPTION TO #26, CLARIFIED USE OF ZP ON #27/28, ADDED REPLACEMENT OPTION TO #27/28, CLARIFIED USE OF OTHER ACTUATORS ON #32, ADDED SS TO #33, ADDED 300 TO THE SS OF #34-37, ITEM 36 IS NOW A SPECIFIC SCREW TYPE, REMOVED SCREW LENGTHS FROM AND ADDED OPTIONS TO #36/37, CORRECTED #39/40 TO SAY MULLION, ADDED HEIGHTS & NOTES TO #44-47, & ITEM 48 NOW 6 ROWS WITH UPDATED NAMES/ALLOYS/NOTES.

RICE ENGINEERING
105 School Creek Trail
Luxemburg, WI 54217
Phone: (920) 617-1042
Fax: (920) 617-1100
www.rice-inc.com
Florida Firm No: F-01000005061
Certificate of Authorization: #9090
Wayne K. Helmila
Registration No: 59092

SEP 27 2024

STATE OF FLORIDA
WAYNE K. HELMILA
LICENSE No. 59092
PROFESSIONAL ENGINEER

GREENHECK
P.O.BOX 410 SCHOFIELD, WISCONSIN 54476-0410

DRAWN BY MES	DATE 8/9/2017
SCALE	
TITLE: ESD-635D LOUVER FLANGE FRAME SLEEVE MOUNT & CONTINUOUS ANGLE MOUNT PART LIST, H≤144" & H≤96"	SHEET NO. 36 OF 37
	CAD DRAWING NO. ESD-635D

GENERAL NOTES:

1. IT SHALL BE THE RESPONSIBILITY OF THE PERMIT HOLDER TO VERIFY THE STRUCTURAL INTEGRITY OF THE EXISTING STRUCTURE TO SUPPORT THE LOADS IMPOSED BY THE LOUVER(S).
2. THE LOUVER HAS BEEN DESIGNED AND TESTED IN ACCORDANCE WITH THE HIGH VELOCITY HURRICANE ZONE (HVHZ) REQUIREMENTS OF THE CURRENT FLORIDA BUILDING CODE (FBC) TO TEST PROTOCOLS (1) TAS 201 (IMPACT), TAS 202 (UNIFORM STATIC PRESSURE), TAS 203 (CYCLIC PRESSURE), AND, WITH VCD-40 DAMPER ATTACHED WITH DAMPER BLADES FULLY CLOSED, AMCA 550 (HIGH VELOCITY WIND DRIVEN RAIN).
3. LOUVER ASSEMBLY IS QUALIFIED FOR A DESIGN LOAD OF:
   (1) +/- 150 PSF (ASD) FOR SECTION SIZES OF ≤ 43.0"x144.0"
   +/- 130 PSF (ASD) FOR SECTION SIZES OF ≤ 49.5"x144.0"
   +/- 105 PSF (ASD) FOR SECTION SIZES OF ≤ 61.5"x144.0"
   +/- 90 PSF (ASD) FOR SECTION SIZES OF ≤ 72.0"x144.0"
4. MAXIMUM SINGLE SECTION SIZE IS 72" WIDE BY 144" HIGH. MAXIMUM ASSEMBLED LOUVER SIZE IS UNLIMITED WIDE BY 144" HIGH.
5. SECTIONS OR ASSEMBLIES MAY BE STACKED VERTICALLY PROVIDING A SUITABLE STRUCTURAL SUPPORT IS DESIGNED AND INSTALLED BY OTHERS TO SUPPORT ALL LOADS TRANSFERRED FROM THE LOUVER.
6. CONCRETE MASONRY (CMU) SHALL BE MIN ASTM C90, TYPE II, FILLED W/ 2 KSI GROUT.
7. THE SLEEVE MOUNT STYLE LOUVER UTILIZES AN ANCHORLESS INSTALLATION METHOD THAT DOES NOT REQUIRE THE USE OF ANCHORS INTO THE SUBSTRATE. IT MAY BE INSTALLED IN ANY SUBSTRATE THAT WILL WITHSTAND THE LOADS TRANSFERRED TO IT BY THE LOUVER. ALSO SEE NOTE #1.
8. THE CONTINUOUS ANGLE MOUNT STYLE UTILIZES A CONTINUOUS JAMB ANGLE THAT IS ATTACHED TO (1) THE SUBSTRATE BY ANCHORS. IT MAY BE INSTALLED IN CRACKED CONCRETE, CMU, STEEL, OR WOOD ACCORDING TO THE ANCHOR SCHEDULE. ALSO SEE NOTE #1.
9. (1) A) LOUVER ASSEMBLY WITHOUT THE VCD-40 DAMPER SHALL ONLY BE INSTALLED IN A LOCATION WHERE THE ROOM BEHIND THE LOUVER IS DESIGNED TO DRAIN WATER PENETRATING INTO THE ROOM AND THE ROOM WILL HOUSE WATER RESISTANT OR WATER PROOF EQUIPMENT, COMPONENTS, OR SUPPLIES.
   (1) B) LOUVER ASSEMBLY WITH THE VCD-40 DAMPER MAY BE INSTALLED IN A LOCATION WHERE THE ROOM BEHIND THE LOUVER IS NOT DESIGNED TO DRAIN WATER PENETRATING INTO THE ROOM AND THE ROOM WILL HOUSE NON-WATER RESISTANT OR NON-WATER PROOF EQUIPMENT, COMPONENTS, OR SUPPLIES.
10. INSTALLER TO PROVIDE SEPARATION OF DISSIMILAR MATERIALS AS REQUIRED (SEE CURRENT FBC). SEE OLDER 2010 FBC, BUILDING, 2003.8.4 FOR MORE INFORMATION ON SEPARATION OF DISSIMILAR MATERIALS. ALL ALUMINUM, STAINLESS STEEL (SS) AND PLATED/COATED STEEL PARTS PROVIDED BY MANUFACTURER ARE INHERENTLY CORROSION RESISTANT OR HAVE A CORROSION RESISTANT COATING.
11. (1) THE VCD-40 MAY BE OPERATED BY THE MANUAL QUADRANT SHOWN OR BY ANY TYPE OF ACTUATOR AND ANY TYPE OF LINKAGE/ASSEMBLY COMPONENTS.
12. FRAME CONSTRUCTION: HEADS & SILLS ARE SQUARE CUT. JAMBS SQUARE CUT AT HEAD & SILL. CORNERS ARE SECURED WITH (2) #10x1-1/4 SCREW & SILICONE SEALED. BLADES ARE SECURED TO JAMBS WITH (2) #10x1-1/4 SCREWS AND WELDED AT EACH END.
13. STEEL, STAINLESS-STEEL, ALUMINUM PARTS MAY BE MADE OUT OF ALTERNATE ALLOY THAT HAS EQUAL (1) OR GREATER YIELD STRENGTH. NON-LABELED VALUES ARE IMPERIAL. DIMENSIONS & SIZES ARE MINIMUMS UNLESS NOTED OTHERWISE.
14. BLADE SUPPORT ANGLE AND OPTIONAL BLADE SUPPORT BRACKETS ARE ONLY REQUIRED WHEN ACTUAL LOUVER SECTION WIDTH IS GREATER THAN 36 INCHES.

(1)

MAX SECTION HEIGHT (IN.)	MAX WIND LOAD, BASED ON SINGLE SECTION SIZE (+/- PSF, ASD)			
≤ 144.0	150	130	105	90
	≤ 43.0	≤ 49.5	≤ 61.5	≤ 72.0
	MAX SECTION WIDTH (IN.)			

PRODUCT REVISED
as complying with the Florida Building Code
NOA-No. 24-0930.04
Expiration Date 12/06/2029
By
Miami-Dade Product Control

REV 01: 8/1/24, MOVED NOTES TO THIS NEW PAGE, ADDED AMCA 550 IN NOTE 2, UPDATED ALLOWABLE PRESSURE BASED ON SECTION SIZE TO NOTE 3, ADDED TABLE OF ALLOWABLE PRESSURE BASED ON SECTION SIZE, ADDED CRACKED TO CONCRETE IN NOTE 8, ORIGINAL NOTE 9 IS NOW NOTE 9A, ADDED 9B, CLARIFIED THE ALLOWANCE OF OTHER ACTUATORS/ETC IN NOTE 11, & ADDED LAST TWO SENTENCES TO NOTE 13.

DATE 8/9/2017
DRAWN BY MES
SCALE
SHEET NO. 37 OF 37
CAD DRAWING NO. ESD-635D

GREENHECK
P.O.BOX 410 SCHOFIELD, WISCONSIN 54476-0410

TITLE
ESD-635D LOUVER
FLANGE FRAME SLEEVE MOUNT
& CONTINUOUS ANGLE MOUNT
NOTES, H≤144" & H≤96"

WAYNE K. HELMILA
LICENSE
No. 59092
STATE OF FLORIDA
PROFESSIONAL ENGINEER

SEP 27 2024

RICE
ENGINEERING
105 School Creek Trail
Luxemburg, WI 54217
Phone: (920) 617-1042
Fax: (920) 617-1100
www.rice-inc.com
Florida Firm No: F-01000005061
Certificate of Authorization: #9090
Wayne K. Helmila
Registration No: 59092